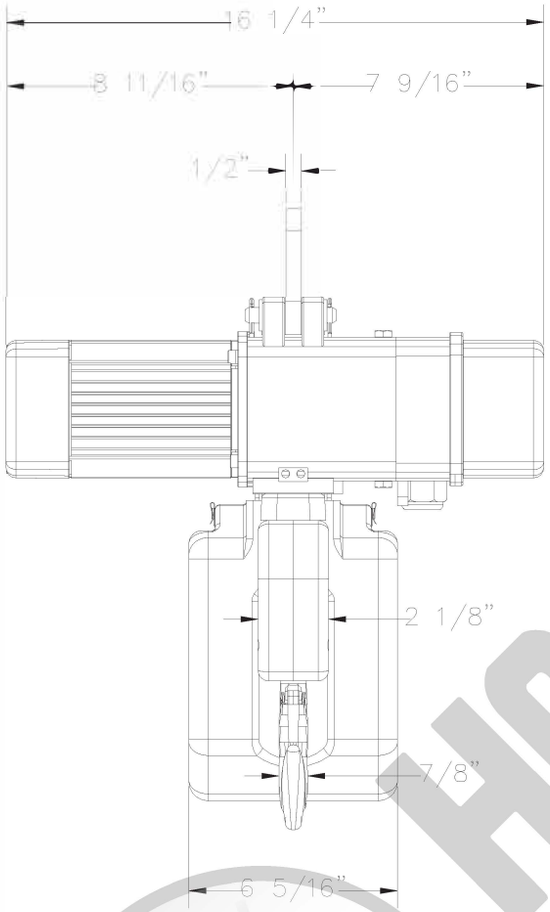

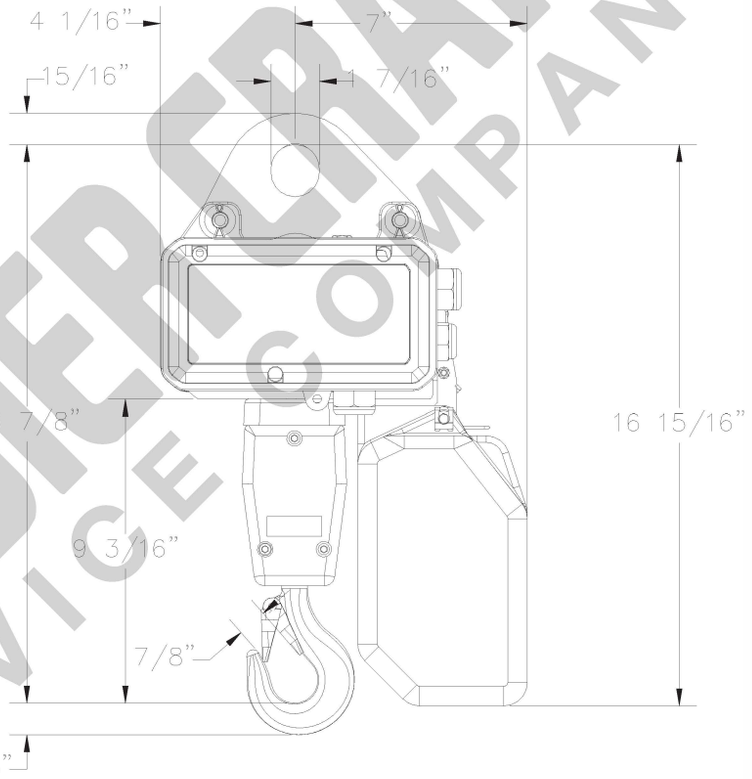

HOOSIER CRANE SERVICE COMPANY

UNLESS OTHERWISE SPECIFIED	GORBEL 600 FISHERS RUN P.O. BOX 593 FISHERS, NY 14453-0593
ALL DIMENSIONS ARE IN INCHES	
BREAK ALL SHARP EDGES .010 MAXIMUM	
CONFORMANCE TO STANDARDS ASME Y14.5M ANSI/AWS D14.1	
TOLERANCE 1/X ± 1/16 .XX ± .010 .XXX ± .005 X° ± 1°	MAT'L: Detail Drawing TITLE: 94572 GECH-1/4-D-16/4-SSP-460-10-2-3
	DWN. BY Gorbel — DATE: 4/29/2020
QTY. 1	C.O. — P/N: 030.16

THIS DRAWING REPRESENTS A CONFIDENTIAL PROPRIETARY DESIGN ORIGINATED BY GORBEL INC. AND ALL DESIGN, MANUFACTURING, REPRODUCTION, USE, AND SALES RIGHTS REGARDING THE SAME ARE EXPRESSLY RESERVED. IT IS SUBMITTED UNDER A CONFIDENTIAL RELATIONSHIP FOR A SPECIFIC PURPOSE, AND THE RECIPIENT AGREES BY ACCEPTING THIS DRAWING NOT TO SUPPLY OR DISCLOSE ANY INFORMATION REGARDING IT TO ANY UNAUTHORIZED PERSON, OR TO INCORPORATE IN OTHER PROJECTS ANY SPECIAL FEATURES PECULIAR TO THIS DESIGN. ALL PATENT RIGHTS HERETO ARE EXPRESSLY RESERVED BY GORBEL INC., FISHERS, NY.