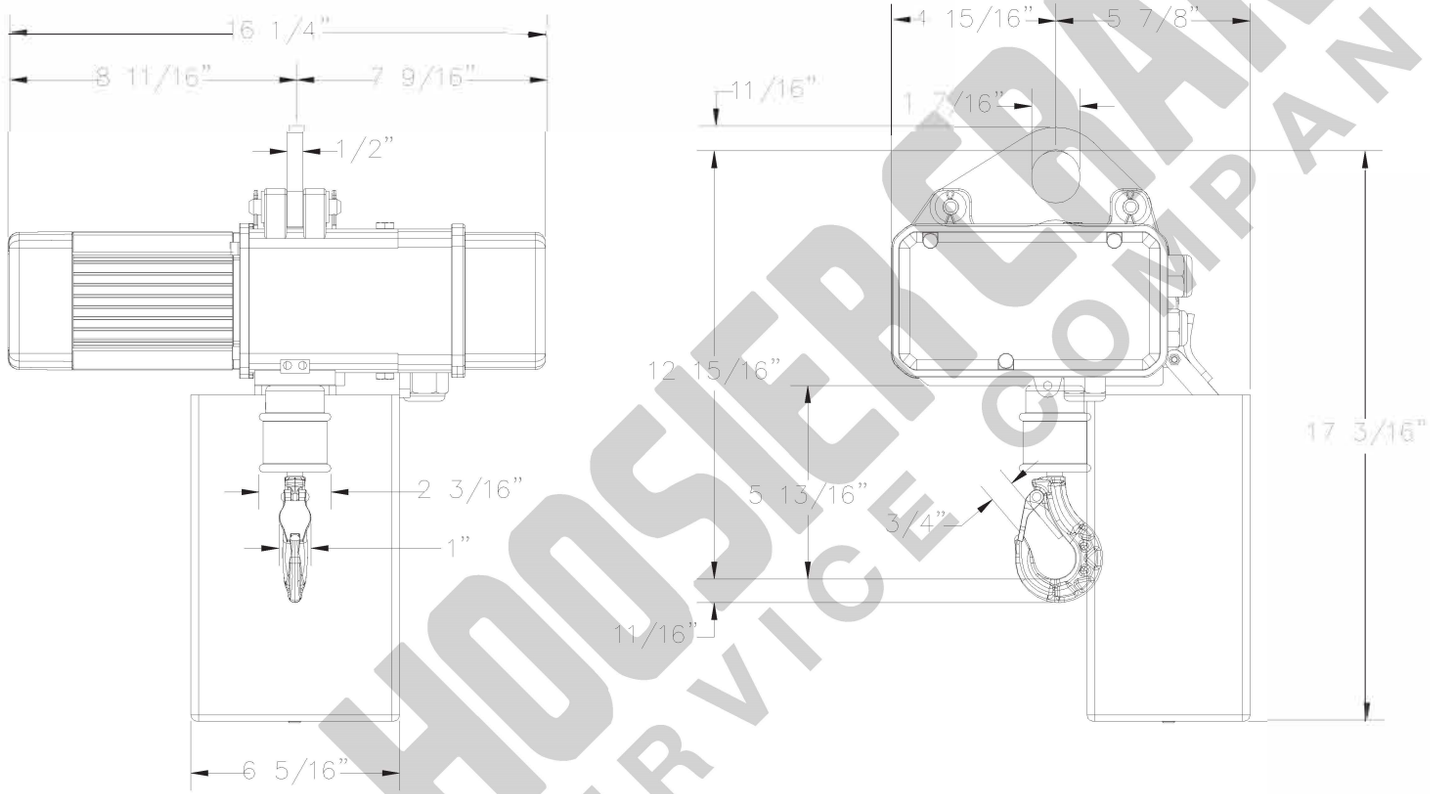

UNLESS OTHERWISE SPECIFIED	GORBEL 600 FISHERS RUN P.O. BOX 593 FISHERS, NY 14453-0593
ALL DIMENSIONS ARE IN INCHES	
BREAK ALL SHARP EDGES .010 MAXIMUM	
CONFORMANCE TO STANDARDS ASME Y14.5M ANSI/AWS D14.1	
TOLERANCE 1/X ± 1/16 .XX ± .010 .XXX ± .005 X° ± 1°	MAT'L: Detail Drawing TITLE: 94572 GECH-1/8-D-32/8-SSP-460-10-1-3
QTY. 1	DWN. BY Gorbel — DATE: 4/28/2020 C.O.# — P/N: 030.16