5.9 INSPECTION AND MAINTENANCE – HOIST BRAKE

The main hoist brake is a spring applied disc brake. The brake is electro-magnetically released by the application of DC to the brake coil in the stator. The size of the brake fitted to your hoist is indicated within the hoist model code see 2.4.
When inspecting the brake, particular attention should be made to checking the air gap and the condition of the rotor (brake disc) spline.

5.9.1 Hoist Brake Components

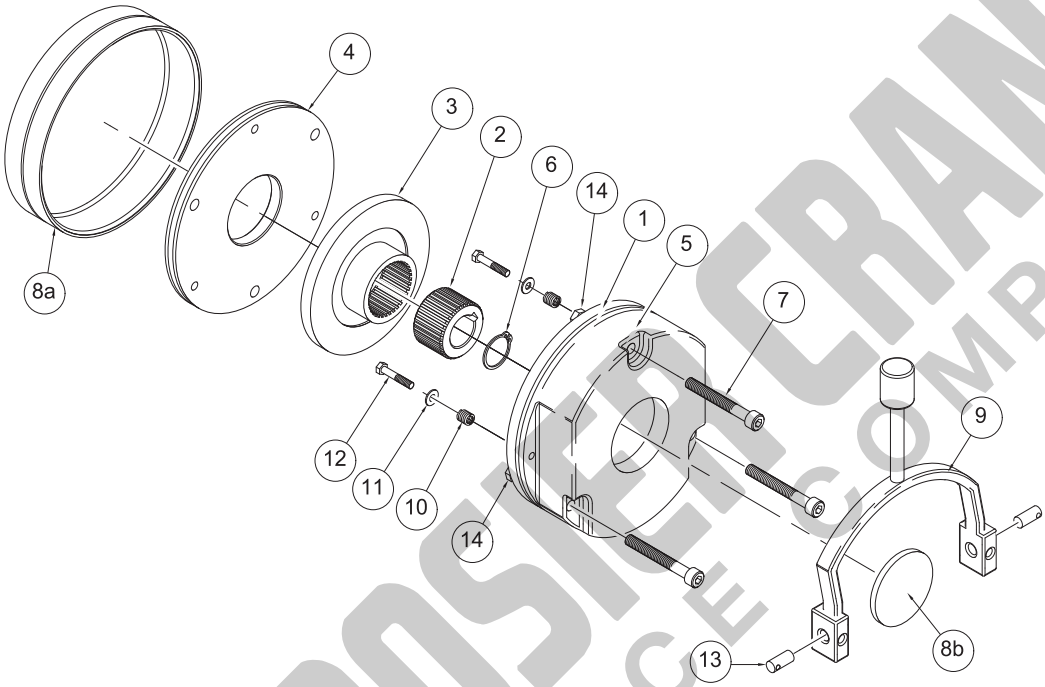

Figure 50 – Hoist Brake Components

Ref	Description
1	Armature plate
2	Brake hub
3	Brake disc (rotor)
4	Mounting Flange
5	Stator
6	Hub circlip
7	Assembly screws
8a	Outer brake seal (optional kit)

Ref	Description
8b	Stator brake seal (optional kit)
9	Hand release mechanism
10	Hand release spring
11	Washer
12	Hand release fixing
13	Barrel nuts
14	Adjustment tubes

5.9.2 Hoist Brake Data

Hoist Brake Size (see model code section 2.4)	1	2	3	4	5	6	7	8	9
Nominal air gap 'a' (mm) (+0.1, -0.05mm)	0.3	0.3	0.3	0.3	0.3	0.4	0.4	0.4	0.4
Maximum air gap 'a' (mm)	0.45	0.75	0.75	0.75	0.75	1.0	0.6	1.0	0.6
Maximum rotor thickness (mm)	10.0	10.0	10.0	10.0	11.5	13.0	16.0	16.0	16.0
Minimum rotor thickness (mm)	8.3	7.5	7.5	7.5	8.0	10.0	12.4	12.0	12.4
Rotor outside diameter (mm)	115	124	124	124	149	174	206	206	206
Maximum adjustment / admissible wear (mm)	1.7	2.5	2.5	2.5	3.5	3.0	3.6	4.0	3.6
Tightening torque of assembly fixings (Nm)	9.5	23	23	23	23	23	46	46	46
Tightening torque of hand release lever (Nm)	4.8	12	12	12	12	23	23	23	23
Hand release clearance 's' (mm)	1.5	1.5	1.5	1.5	1.5	2.0	2.0	2.0	2.0

Before adjusting the brake or changing the disc, lower the bottom block to a suitable level (floor or platform) and allow it to rest on a solid support. Disconnect the power supply to the hoist and to the brake.

5.9.3 Brake Disc (Rotor) Spline

Check the brake disc and hub for wear on the spline teeth. The end of the spline can be viewed from the end of the brake shaft. If the brake is fitted with the seal end cap (8b), this will have to be removed before inspection. For a more detailed inspection the brake disc will have to be removed.
If the spline appears replace the brake disc and/or hub immediately.

5.9.4 Checking / Adjusting the Air Gap

To inspect the air gap it may be necessary to lift or remove the outer brake seal (8a), where fitted. Adjustment of the hoist brake will require total removal of the outer brake seal.
The air gap '**a**' (between the stator (5) and the armature plate (1)) should be checked in at least three positions around the circumference of the brake using non-magnetic feeler gauges (see Figure 51). The air gap should not exceed the maximum air gap figure given in the above table.

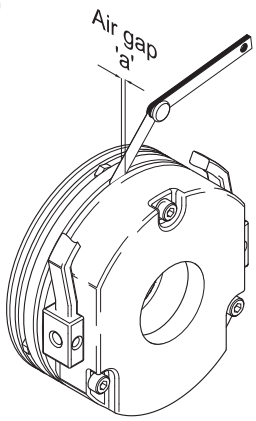

Figure 51 – Hoist Brake Air Gap (Checking)

Where adjustment is required, slacken the assembly screws (7). Adjust the air gap by turning the adjustment tubes (14) until the nominal air gap '**a**' is reached (see Figure 52).

- If the air gap is too large, screw the three adjustment tubes (14) into the stator. If the air gap is too small, screw the adjustment tubes out of the stator.

NOTE : 1/6 turn adjusts the air gap by approx. 0.15mm

- Re-tighten the assembly fixings to the recommended torque value (see table in 5.9.2).
- Re-check the air gap and repeat the adjustment procedure if necessary.
- Test the brake for correct operation before re-fitting the outer brake seal (where fitted) and returning into service.

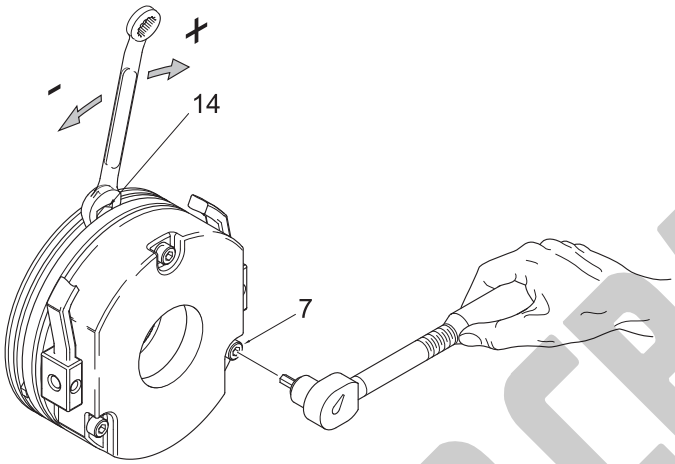

Figure 52 – Hoist Brake Air Gap (Adjustment)

5.9.5 Changing the Brake Disc (Brake Rotor) / Inspecting the Brake Hub

The thickness of the brake disc can be measured using a vernier calliper without the need to remove the brake. Disconnect the power supply and remove the brake seal (if fitted). Measure between the mounting flange and the armature plate (Figure 53). If the minimum thickness is below the figure given in the Hoist Brake Data table (5.9.2), the brake disc should be replaced.

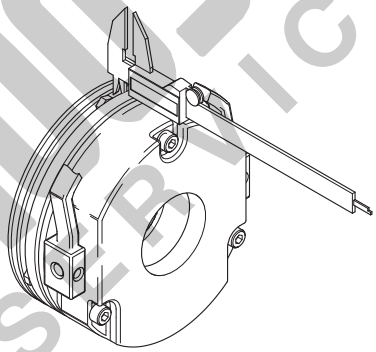

Figure 53 – Hoist Brake Disc (Inspection)

- Remove the outer brake seal (where fitted) and clean any brake dust from around the brake.
- Loosen the assembly fixings evenly and remove, taking care to support the brake body.
- Remove the brake body, taking note of its orientation.
- The brake rotor (brake disc) will now be exposed. Withdraw the brake rotor from its hub.
- Before replacing the brake disc, visually inspect the end of the key between the brake hub and shaft. Check the condition of the spline on the brake hub, and ensure there is no radial or rotational play between either the new brake disc and the hub or the hub and the shaft. If the hub is damaged, worn, or play is apparent, the hub should be replaced. Before replacing, consult Street Crane.
- Ensure the face of the mounting flange is clean and free of any oil or grease. If the mounting flange is worn or excessively scored it should be replaced. Consult Street Crane before replacing.
- Using a vernier calliper, measure both the new brake disc thickness and length of protrusion of the adjustment tubes from the back of the brake.

- Calculate the distance between the stator and the armature plate as follows: -

Distance = Brake disc thickness + Nominal Air Gap 'a' – adjustment tube height

- The adjustment tubes should be unscrewed until the calculated distance between the stator and the armature plate is reached.
- Slide the new brake disc (rotor) onto the hub.
- Replace the brake body in the same orientation as originally installed.
- Replace the assembly fixings and tighten to the torque value stated in the table (5.9.2).
- Check and adjust, where necessary, the nominal air gap 'a' and the hand release clearance 's' (see 5.9.4 and 5.9.6).
- Replace the brake seal (where fitted) (see 5.9.7).
- Re-connect the brake supply and test the brake for correct operation before returning into service.

5.9.6 Fitting the Hand Release

For safety reasons, the hand release is spring loaded and returns to its original position (brake applied) automatically.

- Insert the compression springs (10) into the holes of the armature plate (1).
- Fit the washers (11) onto the hand release fixings (12) and assemble through the compression springs (10) and the stator (5).
- Fit the barrel nuts (13) into the holes provided in the hand release (9).
- Position the hand release (9) over the stator and tighten the hexagon screws (12) into the barrel nuts (13) until the armature plate moves towards the stator.
- Adjust the gap between the armature plate and the stator using the hexagon hand release screws (12) to achieve a dimension ('s' + 'a') (see Figure 54). Example 1.8mm (1.5+0.3) for brake size 3. Check the dimension at three positions around the circumference.
- Fit the complete brake assembly onto the hoist and tighten the assembly screws (7) to the value shown in the table (5.9.2).
- Re-adjust the air gap 'a' in accordance with section 5.9.4.
- Re-check the Hand Release Clearance dimension 's' and nominal air gap 'a' before returning into service.

The hand release clearance gap 's' is important. The brake may not apply correctly if the clearance is too small. If the nominal air gap 'a' is adjusted at a later date, do not alter the hand release clearance.

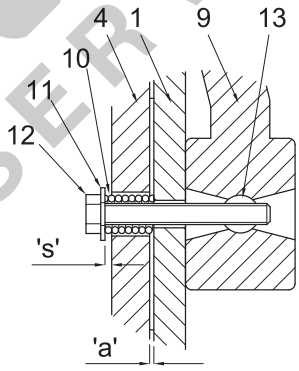

Figure 54 – Hoist Brake Hand Release