Installation
Operating
Maintenance &
Spare Parts

End Truck

RT/RS

Manual

R&M
MATERIALS HANDLING

HOOSIER CRANE SERVICE COMPANY

R&M Materials Handling, Inc.
4501 Gateway Boulevard
Springfield, Ohio 45502
☎ : (937) 328-5100
FAX: (937) 325-5319

EN PS03447 MASTER Rev: 18.3.2003

Read the instructions supplied with the hoist before installation and commissioning.

Keep the instructions in a safe place for future reference.

Table of content

1 Safety instructions 3
1.1 Safety instructions for preparing to install the end truck 3
1.2 Safety instructions for installing and operating the end truck 3
1.3 Safety instructions for servicing the end truck 3
2 End Truck RT09/RT11/RS11/RT14/RS14..... 4
2.1 General 4
2.2 Main components 4
2.3 Assembling the end truck..... 4
2.4 Inspection and service procedure for end truck 5
2.5 Removing and replacing the drive wheel 5
2.6 Removing and replacing the idler wheel 5
2.7 Inspection and servicing intervals 5
3 End Truck RT20/RT25/RT32/RT50 7
3.1 General 7
3.2 Main components 7
3.3 Assembling the end truck..... 7
3.4 Inspection and service procedure for end truck 8
3.5 Removing and replacing the drive wheel 8
3.6 Removing and replacing the idler wheel 8
3.7 Inspection and servicing intervals 8
4 Lubricants 10
4.1 Alternative lubricants 10
5 Recommended tightening torques..... 11
6 Spare Parts 12
6.1 RT09 12
6.2 RT11/RS11 14
6.3 RT14/RS14 16
6.4 RT20 18
6.5 RT25 21
6.6 RT32 24
6.7 RT50 27

HOUSER CRANE SERVICE COMPANY

R&M Materials Handling, Inc. reserves the right to alter or amend the above information without notice.

R&M Materials Handling, Inc.
4501 Gateway Boulevard
Springfield, Ohio 45502
☎ : (937) 328-5100
FAX: (937) 325-5319

1 Safety instructions

1.1 Safety instructions for preparing to install the end truck

Follow these instructions when preparing to install the end truck:

- Ensure that the installation personnel are competent and qualified, and they are provided with adequate instructions for carrying out the installation work.
- Check for any dimensional nonconformances in the drawings, instructions, parts and structural measurements.
- Beware of other moving machinery - such as machines, other cranes and automatic doors - in the installation and servicing area. The installation area must be arranged so that operation of other equipment in the area does not endanger the installation workers (or *vice versa*).
- Prevent unauthorized persons and bystanders from walking in or under the work site.

1.2 Safety instructions for installing and operating the end truck

Follow these instructions when installing the end truck:

- Use proper safety equipment to prevent objects from falling when working in high places.
- Ensure that machinery and equipment cannot start up accidentally and cannot be moved during installation or servicing.
- Keep the installation and servicing locations and the walkways leading to them, clean and tidy.

Follow these instructions when operating the end truck:

- The useful lifetime of the end truck depends heavily on whether the end truck is properly applied. Do not use the end truck for other than the duty group classification for which it was designed or selected for.
- When traveling, make sure that the moving parts do not collide with objects or people.
- If defects have been noticed in the end truck, carry out the necessary inspections and repair work. Be sure that the end truck operates properly before you start to use it again.

1.3 Safety instructions for servicing the end truck

Follow these instructions when servicing the end truck:

- Carry out regular inspections and preventive maintenance in compliance with the instructions. Keep a record of inspections and servicing. Regular servicing and inspection procedures are necessary for the safe and efficient operation of the end truck. In uncertain or unusual cases, contact the supplier of the end truck.
- Use trained service personnel authorized by the manufacturer of the end truck for servicing the end truck. The person servicing the end truck must be competent for the task and must be familiar with the servicing and inspection instructions.
- Use only genuine spare parts approved by the manufacturer of the end truck.
- Any modifications or additions made to the frame of the end truck must first be discussed with the supplier of the end truck.

HOOSIER CRANE SERVICE COMPANY

R&M Materials Handling, Inc. reserves the right to alter or amend the above information without notice.

R&M Materials Handling, Inc.
4501 Gateway Boulevard
Springfield, Ohio 45502
☎ : (937) 328-5100
FAX: (937) 325-5319

2 End Truck RT09/RT11/RS11/RT14/RS14

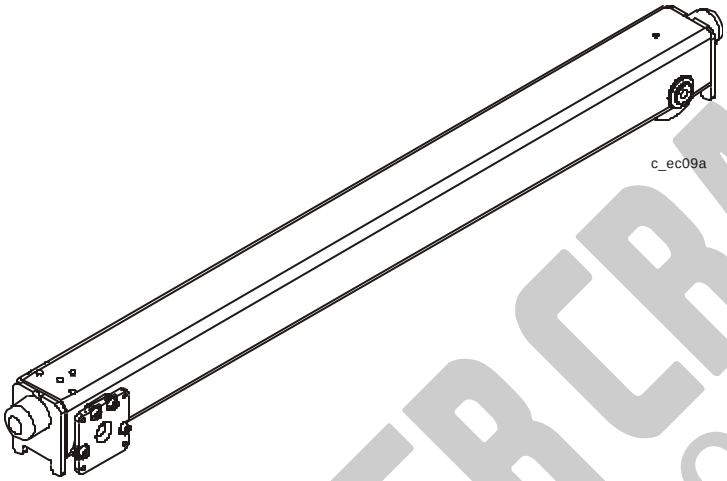

2.1 General

End trucks are designed to carry the crane or hoist as a pair. Any other kind of use must be designed case by case. The end truck is suitable for both indoor and outdoor use.

2.2 Main components

One of the main components of end truck is the wheels. The standard end truck is equipped with a drive wheel and an idler wheel, two drive wheels can be furnished on the truck when needed.

☞ Wheels are prealigned at the factory and cannot be realigned in the field.

☞ Any welding near the wheels may affect the wheel alignment.

2.3 Assembling the end truck

✋ **Ensure that the working area is safe.**

- Align and square the main girder to the end truck. Measure the cross length at the holes that are located on the top surface of the end truck above the wheels or at the pin holes in joint plate.
- The outer flange of the wheels is machined and can be used for measuring the rail gauge (span).
- The joint plate can be aligned and welded to the main girder when it is separated from the end truck.

☞ If the joint plate has been removed from the end truck, make sure that all parts such as the friction rings, support plates are properly reinstalled before tightening the bolts and using the crane.

- Tighten the joint plate bolts to the recommended tightening torque. (see ‘Recommended tightening torques’ section).

☞ The joint plate bolts are hand-tightened at the factory and must be properly tightened when building the crane.

R&M Materials Handling, Inc. reserves the right to alter or amend the above information without notice.

R&M Materials Handling, Inc.
4501 Gateway Boulevard
Springfield, Ohio 45502
☎ : (937) 328-5100
FAX: (937) 325-5319

2.4 Inspection and service procedure for end truck

The following inspections and servicing procedures must be performed at regular intervals. See 'Inspection and servicing intervals' section for the inspections and servicing schedule.

- Check the tightness of the bolts on the end truck.
- Check the wheel for excessive wear.

☞ Some wearing on the wheels is normal. If wearing of the wheels affects the movement of the crane, replace the wheels.

- The wheel bearings (RT09-RT/RS14) are permanently lubricated with grease and do not need additional lubrication..

2.5 Removing and replacing the drive wheel

✋ **Ensure that the working area is safe and the crane cannot be started accidentally when servicing. Be sure to switch off and lock out power at the main switch to avoid an electrical hazard.**

- Disconnect the power supply plug from the motor.
- Remove the mounting bolts from the drive.
- Remove the drive from the end truck.
- Jack up the end truck to lift the wheel off the rail.
- Remove the bearing housing from each side of the end truck.
- Remove the wheel from under the end truck.

2.6 Removing and replacing the idler wheel

✋ **Ensure that the working area is safe and the crane cannot be started accidentally when servicing. Be sure to switch off and lock out power at the main switch to avoid an electrical hazard.**

- Jack up the end truck to lift the wheel off the rail.
- Remove the retaining rings from shaft.
- Make sure the support sleeves and shimming washers do not drop out when removing the rings.
- Pull out the shaft from end truck.
- Remove the wheel from under the end truck.

2.7 Inspection and servicing intervals

The inspection and servicing interval for the end truck is 12 calendar months for a crane in an 8-hour per day, 5-day per week work period, under normal environmental conditions (free from excessive dust, moisture, and corrosive fumes). The inspection and servicing intervals of the end trucks could be defined by Safe Working Periods (SWPs) if it is being monitored. If the Safe Working Periods (SWPs) is being monitored, then the servicing interval must always be carried out at the end of the Safe Working Period (SWP%) of the crane or hoist, or by the end of the stated number of calendar months, whichever comes first. If the end trucks are being used intermittently, they should be inspected before being used again.

☞ If the duty is heavier, or the environment severe, service intervals should be shortened and more frequent.

R&M Materials Handling, Inc. reserves the right to alter or amend the above information without notice.

HOOSIER CRANE SERVICE COMPANY

R&M Materials Handling, Inc.
4501 Gateway Boulevard
Springfield, Ohio 45502
☎ : (937) 328-5100
FAX: (937) 325-5319

Only authorized or adequately-trained personnel may carry out service or repair work. If any defects or abnormalities are observed, they must be investigated and corrective action must be taken in accordance with the instructions.

HOOSIER CRANE SERVICE COMPANY

R&M Materials Handling, Inc. reserves the right to alter or amend the above information without notice.

R&M Materials Handling, Inc.
4501 Gateway Boulevard
Springfield, Ohio 45502
☎ : (937) 328-5100
FAX: (937) 325-5319

3 End Truck RT20/RT25/RT32/RT50

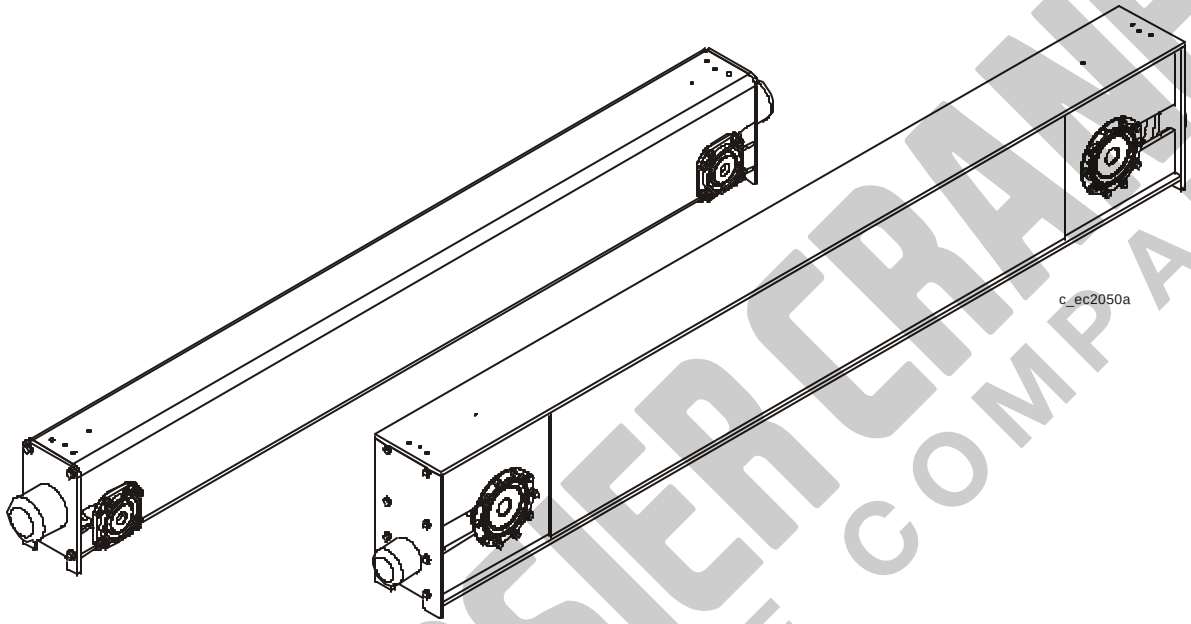

3.1 General

End trucks are designed to carry the crane or hoist as a pair. Any other kind of use must be designed case by case. The end truck is suitable for both indoor and outdoor use.

3.2 Main components

One of the main componens of end truck is the wheels. The standard end truck is equipped with a drive wheel and an idler wheel, but two drive wheels can be furnished on the truck when needed

☞ Wheels are prealigned at the factory and cannot be realigned in the field.

☞ Any welding near the wheels may affect the wheel alignment.

3.3 Assembling the end truck

✋ **Ensure that the working area is safe and the machine cannot be started accidentally when doing the assembly work.**

- Align and square the main girder to the end truck. Measure the cross length at the holes that are located on the top surface of the end truck above the wheels or at the pin holes in joint plate.
- The outer flange of the wheels is machined and can be used for measuring the rail gauge (span).
- The joint plate can be aligned and welded to the main girder when it is separated from the end truck.

☞ If the joint plate has been removed from the end truck, make sure that all parts such as the friction rings, support plates are properly reinstalled before tightening the bolts and using the crane..

- Tighten the joint plate bolts to the recommended tightening torque. (see ‘Recommended tightening torques’ section).

R&M Materials Handling, Inc. reserves the right to alter or amend the above information without notice.

HOOSIER CRANE SERVICE COMPANY

R&M Materials Handling, Inc.
4501 Gateway Boulevard
Springfield, Ohio 45502
☎ : (937) 328-5100
FAX: (937) 325-5319

☞ The joint plate bolts are just loosely preassembled at athe factory and must be properly tightened when building the crane.

3.4 Inspection and service procedure for end truck

The following inspections and servicing procedures must be performed at regular intervals. See 'Inspection and servicing intervals' section for the inspections and servicing schedule.

- Check the tightness of the bolts on the end truck.
- Check the wheel for excessive wear.

☞ Some wearing on the wheel is normal. If wearing of the wheel affects the movement of the crane, replace the wheel.

- Lubricate the wheel bearings.

3.5 Removing and replacing the drive wheel

✋ **Ensure that the working area is safe and the crane cannot be started accidentally when servicing. Be sure to switch off and lock out power at the main switch to avoid an electrical hazard.**

- Disconnect the power supply plug from the motor.
- Remove the mounting bolts from the drive.
- Remove the drive from the end truck.
- Jack up the end truck to lift the wheel off the rail.
- Remove the bearing housing from each side of the end truck.
- Pull out the bearing from wheel (when the bearing is mounted in the wheel).
- Remove the wheel from end truck.
- Reassem ble in the reverse order.

3.6 Removing and replacing the idler wheel

✋ **Ensure that the working area is safe and the crane cannot be started accidentally when servicing. Be sure to switch off and lock out power at the main switch to avoid an electrical hazard.**

- Jack up the end truck to lift the wheel off the rail.
- Remove the mounting bolts from the drive.
- Remove the bearing housing from each side of the end truck..
- Remove the bearing from wheel (when the bearing is mounted in the wheel).
- Remove the wheel from end truck.
- Reassemble in the reverse order.

3.7 Inspection and servicing intervals

The inspection and servicing interval for the end truck is 12 calendar months for a crane in an 8-hour per day, 5-day per week work period, under normal environmental conditions (free from excessive dut, moisture, and corrosive fumes). The inspection and servicing intervals of the end trucks could be defined by Safe Working Periods (SWPs) if it is being monitored. If the Safe Working Periods (SWPs) is being monitored, then the servicing interval must be carried out at the end of the Safe Working Period (SWP%)

R&M Materials Handling, Inc. reserves the right to alter or amend the above information without notice.

HOOSIER CRANE SERVICE COMPANY

R&M Materials Handling, Inc.
4501 Gateway Boulevard
Springfield, Ohio 45502
☎ : (937) 328-5100
FAX: (937) 325-5319

of a crane or a hoist, or by the end of the stated number of calendar months, whichever comes first. If the end trucks are being used in intermittently, they should be inspected before being used again.

☞ If the duty is heavier, or the environment severe, service intervals should be shortened and more frequent.

Only authorized or adequately trained personnel may carry out service or repair work. If any defects or abnormalities are observed, they must be investigated and corrective action must be taken in accordance with the instructions.

HOOSIER CRANE SERVICE COMPANY

R&M Materials Handling, Inc. reserves the right to alter or amend the above information without notice.

R&M Materials Handling, Inc.
4501 Gateway Boulevard
Springfield, Ohio 45502
☎ : (937) 328-5100
FAX: (937) 325-5319

4 Lubricants

Use of a low-grade or incompatible lubricant could damage the bearings. Use only the lubricants recommended by the manufacturer.

Factory-installed lubricant unless otherwise specified:

Trade name and number	Operating temperature
Mobilgrease XHP 222	-25…+150

4.1 Alternative lubricants

Alternative lubricants:

Trade name and number		Operating temperature
Shell Alpida Grease EP2		-20…+150
Esso Unirex EP2		-25…+150
Teboil Multi-purpose HT		-30…+150
Shell Alpida Grease HLS 2	S)	-35…+150
Mobilith SHC 460	S)	-40…+180
Shell Alpida Grease EMS	S)	-50…+150

S) Synthetic lubricant

If the end truck is operated for long periods in extremely cold conditions (colder than -25°C) or extremely hot conditions (hotter than +55°C), it is recommended that a synthetic lubricant be used.

HOOSIER CRANE SERVICE COMPANY

R&M Materials Handling, Inc. reserves the right to alter or amend the above information without notice.

R&M Materials Handling, Inc.
4501 Gateway Boulevard
Springfield, Ohio 45502
☎ : (937) 328-5100
FAX: (937) 325-5319

5 Recommended tightening torques

Recommended tightening torques for screws and nuts.

	Tightening torque			
Size	Strength 8.8		Strength 10.9	
	Nm	Ft lb	Nm	Ft lb
M4	2.7	2.0	4.0	2.9
M5	5.4	4.0	7.9	5.8
M6	9.3	6.8	14	10.3
M8	23	17.0	33	24
M10	45	33.0	66	48.5
M12	77	56.6	115	84.6
M14	125	92	180	132
M16	190	140	280	206
M18	275	202	390	287
M20	385	283	550	404
M22	530	390	750	552
M24	660	485	950	699
M27	980	721	1400	1030
M30	1350	993	1900	1398

HOOSIER CRANE SERVICE COMPANY

R&M Materials Handling, Inc. reserves the right to alter or amend the above information without notice.

R&M Materials Handling, Inc.
4501 Gateway Boulevard
Springfield, Ohio 45502
☎ : (937) 328-5100
FAX: (937) 325-5319

6 Spare Parts

6.1 RT09

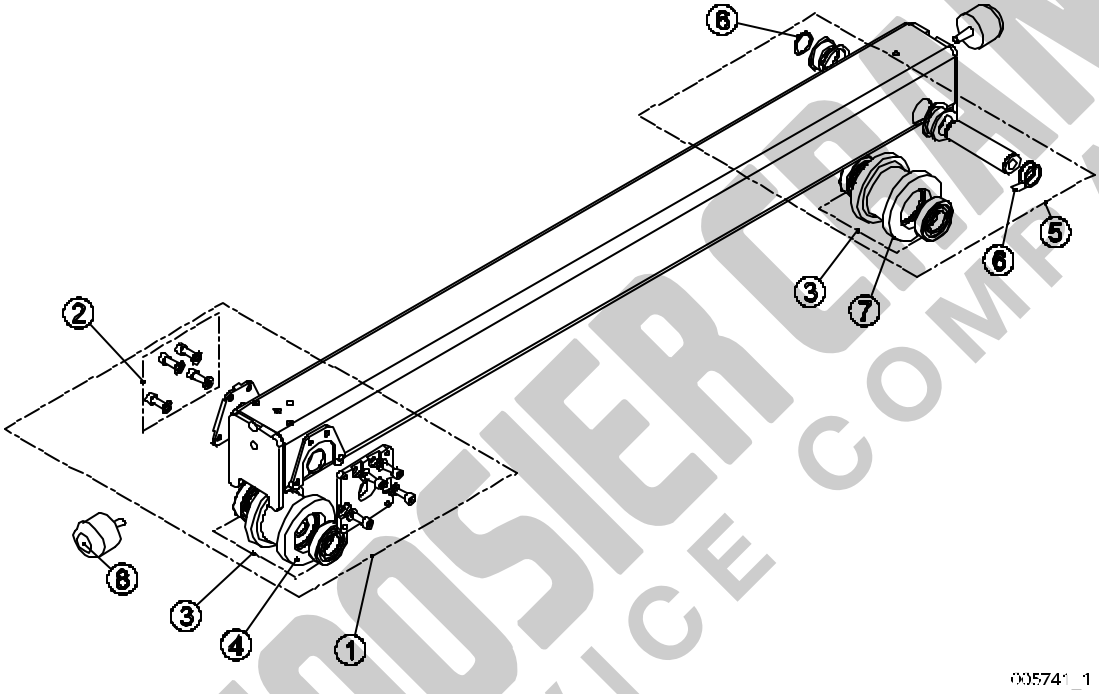

Pos.	Item Code	From	To	Description	Pcs
1	3000001443			WHEEL SET; DRIVE 1: Wheel groove = 50	1
1	3000001676			WHEEL SET; DRIVE 1: Wheel groove = 55	1
1	3000001677			WHEEL SET; DRIVE 1: Wheel groove = 60	1
1	3000001678			WHEEL SET; DRIVE 1: Wheel groove = 65	1
2	3000001444			HARDWARE SET	2
3	3000001679			BEARING SET	2
4	-			WHEEL 1: Wheel groove = 50	
4	-			WHEEL 1: Wheel groove = 55	
4	-			WHEEL 1: Wheel groove = 60	
4	-			WHEEL 1: Wheel groove = 65	
5	3000001680			WHEEL SET; IDLER 1: Wheel groove = 50	1
5	3000001681			WHEEL SET; IDLER 1: Wheel groove = 55	1

R&M Materials Handling, Inc. reserves the right to alter or amend the above information without notice.

HOOSIER CRANE SERVICE COMPANY

R&M Materials Handling, Inc.
4501 Gateway Boulevard
Springfield, Ohio 45502
☎ : (937) 328-5100
FAX: (937) 325-5319

5	3000001682	WHEEL SET; IDLER 1: Wheel groove = 60	1
5	3000001683	WHEEL SET; IDLER 1: Wheel groove = 65	1
6	3000001684	HARDWARE SET	1
7	-	WHEEL 1: Wheel groove = 50	
7	-	WHEEL 1: Wheel groove = 55	
7	-	WHEEL 1: Wheel groove = 60	
7	-	WHEEL 1: Wheel groove = 65	
8	3000000982	BUFFER 1: Buffer type = A	2
8	3000001140	BUFFER 1: Buffer type = B	2

HOOSIER CRANE SERVICE COMPANY

R&M Materials Handling, Inc. reserves the right to alter or amend the above information without notice.

R&M Materials Handling, Inc.
4501 Gateway Boulevard
Springfield, Ohio 45502
☎ : (937) 328-5100
FAX: (937) 325-5319

6.2 RT11/RS11

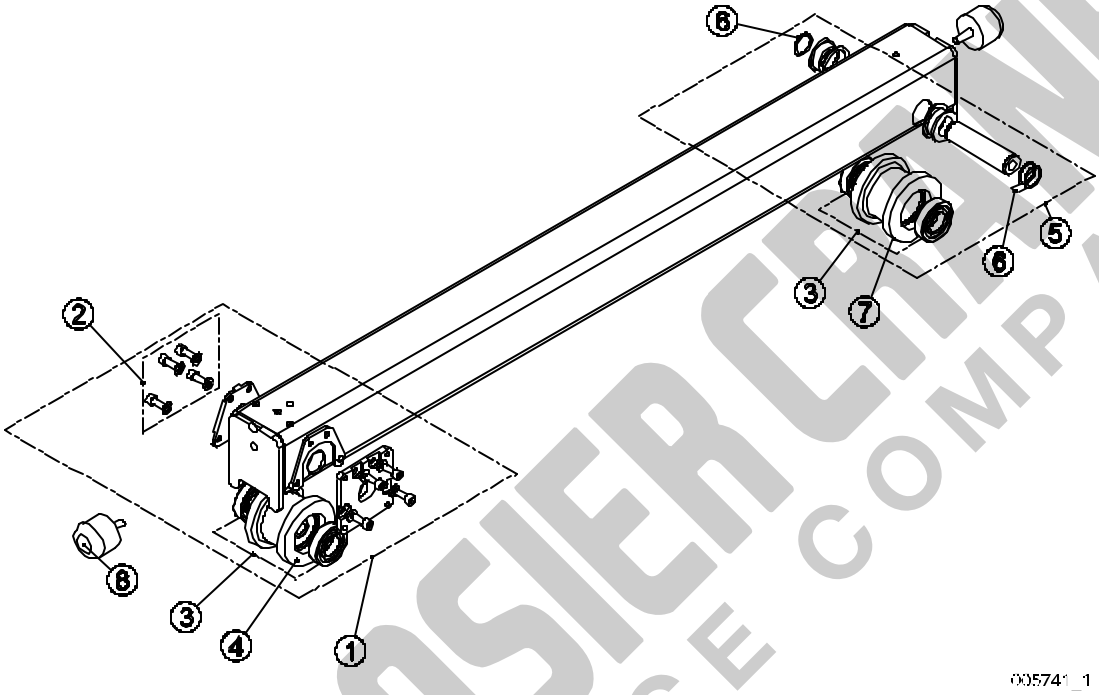

Pos.	Item Code	From	To	Description	Pcs
1	3000001685			WHEEL SET; DRIVE 1: Wheel groove = 50	1
1	3000001686			WHEEL SET; DRIVE 1: Wheel groove = 55	1
1	3000001687			WHEEL SET; DRIVE 1: Wheel groove = 60	1
1	3000001688			WHEEL SET; DRIVE 1: Wheel groove = 65	1
1	3000001689			WHEEL SET; DRIVE 1: Wheel groove = 70	1
1	3000001690			WHEEL SET; DRIVE 1: Wheel groove = 75	1
2	3000001444			HARDWARE SET	2
3	3000001692			BEARING SET	2
4	-			WHEEL 1: Wheel groove = 50	
4	-			WHEEL 1: Wheel groove = 55	
4	-			WHEEL 1: Wheel groove = 60	
4	-			WHEEL 1: Wheel groove = 65	
4	-			WHEEL 1: Wheel groove = 70	
4	-			WHEEL	

R&M Materials Handling, Inc. reserves the right to alter or amend the above information without notice.

HOOSIER CRANE SERVICE COMPANY

R&M Materials Handling, Inc.
4501 Gateway Boulevard
Springfield, Ohio 45502
☎ : (937) 328-5100
FAX: (937) 325-5319

		1: Wheel groove = 75	
5	3000001693	WHEEL SET; IDLER 1: Wheel groove = 50	1
5	3000001694	WHEEL SET; IDLER 1: Wheel groove = 55	1
5	3000001695	WHEEL SET; IDLER 1: Wheel groove = 60	1
5	3000001696	WHEEL SET; IDLER 1: Wheel groove = 65	1
5	3000001697	WHEEL SET; IDLER 1: Wheel groove = 70	1
5	3000001698	WHEEL SET; IDLER 1: Wheel groove = 75	1
6	3000001699	HARDWARE SET	1
7	-	WHEEL 1: Wheel groove = 50	
7	-	WHEEL 1: Wheel groove = 55	
7	-	WHEEL 1: Wheel groove = 60	
7	-	WHEEL 1: Wheel groove = 65	
7	-	WHEEL 1: Wheel groove = 70	
7	-	WHEEL 1: Wheel groove = 75	
8	3000000982	BUFFER 1: Buffer type = A	2
8	3000001140	BUFFER 1: Buffer type = B	2
8	3000001837	BUFFER 1: Buffer type = C	2
8	3000001838	BUFFER 1: Buffer type = D	2

HOOSIER CRANE SERVICE COMPANY

R&M Materials Handling, Inc. reserves the right to alter or amend the above information without notice.

R&M Materials Handling, Inc.
4501 Gateway Boulevard
Springfield, Ohio 45502
☎ : (937) 328-5100
FAX: (937) 325-5319

6.3 RT14/RS14

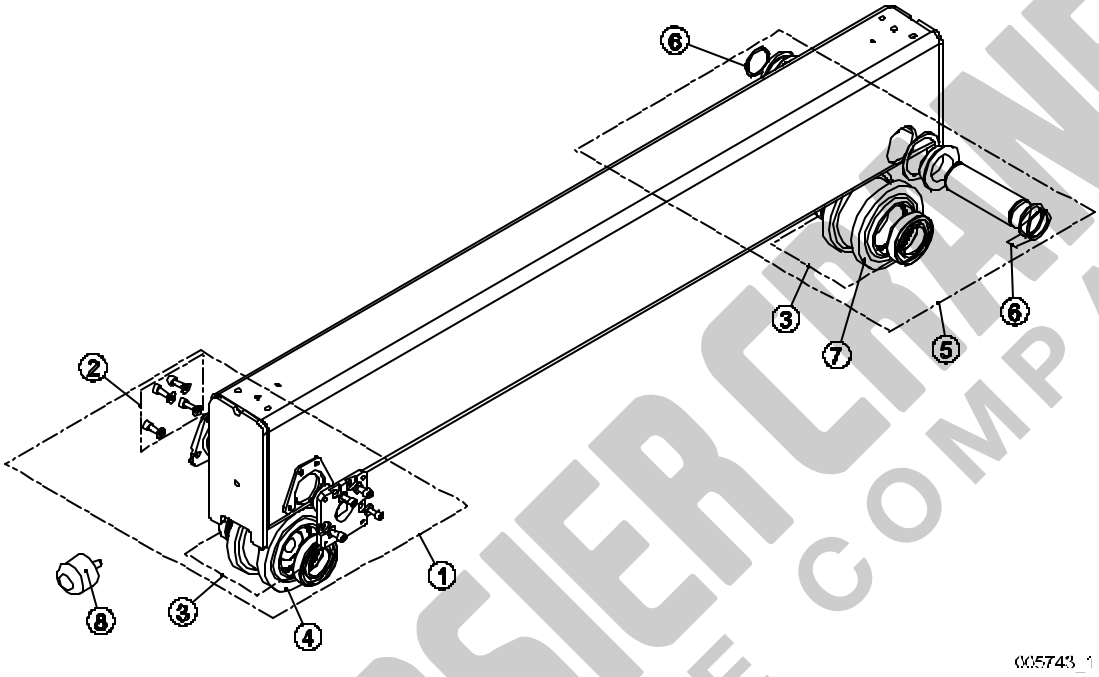

Pos.	Item Code	From	To	Description	Pcs
1	3000001700			WHEEL SET; DRIVE 1: Wheel groove = 50	1
1	3000001701			WHEEL SET; DRIVE 1: Wheel groove = 55	1
1	3000001702			WHEEL SET; DRIVE 1: Wheel groove = 60	1
1	3000001703			WHEEL SET; DRIVE 1: Wheel groove = 65	1
1	3000001704			WHEEL SET; DRIVE 1: Wheel groove = 70	1
1	3000001705			WHEEL SET; DRIVE 1: Wheel groove = 75	1
2	3000001444			HARDWARE SET	2
3	3000001706			BEARING SET	2
4	3000002110			WHEEL 1: Wheel groove = 50	1
4	3000002111			WHEEL 1: Wheel groove = 55	1
4	3000002112			WHEEL 1: Wheel groove = 60	1
4	3000002113			WHEEL 1: Wheel groove = 65	1
4	3000002114			WHEEL 1: Wheel groove = 70	1
4	3000002115			WHEEL 1: Wheel groove = 75	1
5	3000001707			WHEEL SET; IDLER	1

R&M Materials Handling, Inc. reserves the right to alter or amend the above information without notice.

HOOSIER CRANE SERVICE COMPANY

R&M Materials Handling, Inc.
4501 Gateway Boulevard
Springfield, Ohio 45502
☎ : (937) 328-5100
FAX: (937) 325-5319

		1: Wheel groove = 50	
5	3000001708	WHEEL SET; IDLER 1: Wheel groove = 55	1
5	3000001709	WHEEL SET; IDLER 1: Wheel groove = 60	1
5	3000001710	WHEEL SET; IDLER 1: Wheel groove = 65	1
5	3000001711	WHEEL SET; IDLER 1: Wheel groove = 70	1
5	3000001712	WHEEL SET; IDLER 1: Wheel groove = 75	1
6	3000001713	HARDWARE SET	1
7	-	WHEEL 1: Wheel groove = 50	
7	-	WHEEL 1: Wheel groove = 55	
7	-	WHEEL 1: Wheel groove = 60	
7	-	WHEEL 1: Wheel groove = 65	
7	-	WHEEL 1: Wheel groove = 70	
7	-	WHEEL 1: Wheel groove = 75	
8	3000000982	BUFFER 1: Buffer type = A	2
8	3000001140	BUFFER 1: Buffer type = B	2
8	3000001837	BUFFER 1: Buffer type = C	2
8	3000001838	BUFFER 1: Buffer type = D	2

HOOSIER CRANE SERVICE COMPANY

R&M Materials Handling, Inc. reserves the right to alter or amend the above information without notice.

R&M Materials Handling, Inc.
4501 Gateway Boulevard
Springfield, Ohio 45502
☎ : (937) 328-5100
FAX: (937) 325-5319

6.4 RT20

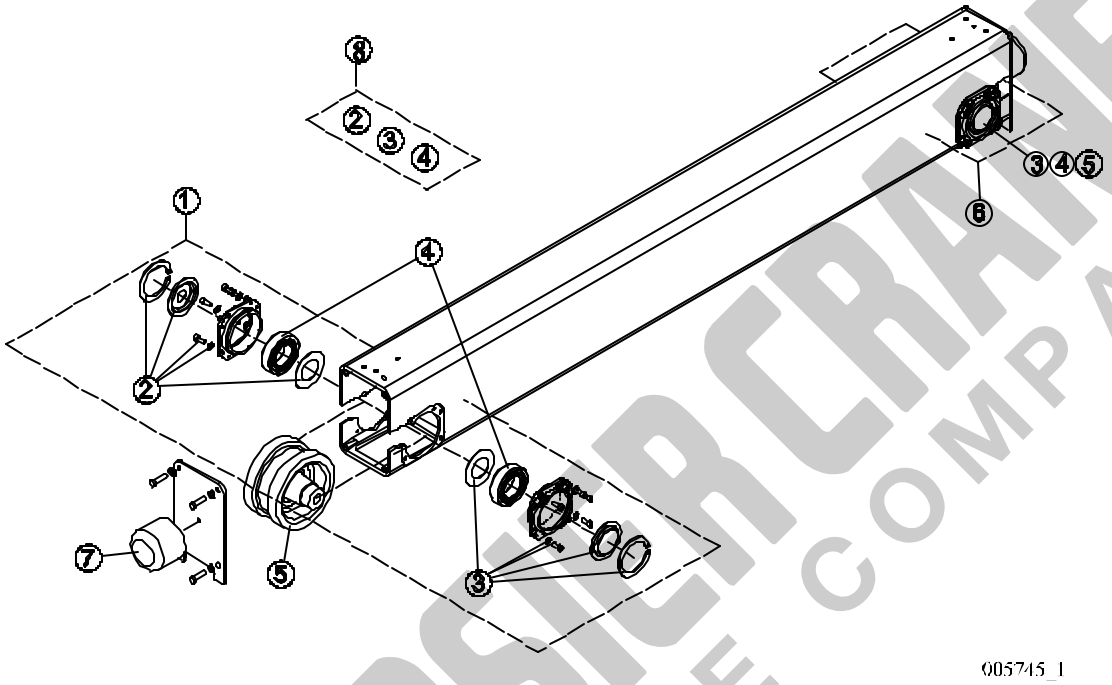

Pos.	Item Code	From	To	Description	Pcs
1	3000001714			WHEEL SET; DRIVE 1: Wheel groove = 55	1
1	3000001715			WHEEL SET; DRIVE 1: Wheel groove = 60	1
1	3000001716			WHEEL SET; DRIVE 1: Wheel groove = 65	1
1	3000001717			WHEEL SET; DRIVE 1: Wheel groove = 70	1
1	3000001718			WHEEL SET; DRIVE 1: Wheel groove = 75	1
1	3000001719			WHEEL SET; DRIVE 1: Wheel groove = 80	1
1	3000001720			WHEEL SET; DRIVE 1: Wheel groove = 85	1
1	3000001721			WHEEL SET; DRIVE 1: Wheel groove = 90	1
1	3000001722			WHEEL SET; DRIVE 1: Wheel groove = 95	1
1	3000001723			WHEEL SET; DRIVE 1: Wheel groove = 100	1
2	3000001735 (3000001177)			HARDWARE SET	1
3	3000001734 (3000001178)			HARDWARE SET	3
4	3000001736			BEARING SET	2
5	3000001167			WHEEL	2

R&M Materials Handling, Inc. reserves the right to alter or amend the above information without notice.

HOOSIER CRANE SERVICE COMPANY

R&M Materials Handling, Inc.
4501 Gateway Boulevard
Springfield, Ohio 45502
☎ : (937) 328-5100
FAX: (937) 325-5319

		1: Wheel groove = 55	
5	3000001168	WHEEL 1: Wheel groove = 60	2
5	3000001169	WHEEL 1: Wheel groove = 65	2
5	3000001170	WHEEL 1: Wheel groove = 70	2
5	3000001171	WHEEL 1: Wheel groove = 75	2
5	3000001172	WHEEL 1: Wheel groove = 80	2
5	3000001173	WHEEL 1: Wheel groove = 85	2
5	3000001174	WHEEL 1: Wheel groove = 90	2
5	3000001175	WHEEL 1: Wheel groove = 95	2
5	3000001176	WHEEL 1: Wheel groove = 100	2
6	3000001724	WHEEL SET; IDLER 1: Wheel groove = 55	1
6	3000001725	WHEEL SET; IDLER 1: Wheel groove = 60	1
6	3000001726	WHEEL SET; IDLER 1: Wheel groove = 65	1
6	3000001727	WHEEL SET; IDLER 1: Wheel groove = 70	1
6	3000001728	WHEEL SET; IDLER 1: Wheel groove = 75	1
6	3000001729	WHEEL SET; IDLER 1: Wheel groove = 80	1
6	3000001730	WHEEL SET; IDLER 1: Wheel groove = 85	1
6	3000001731	WHEEL SET; IDLER 1: Wheel groove = 90	1
6	3000001732	WHEEL SET; IDLER 1: Wheel groove = 95	1
6	3000001733	WHEEL SET; IDLER 1: Wheel groove = 100	1
7	3000001140	BUFFER 1: Buffer type = B 2: Frame size = E	2
7	3000001837	BUFFER 1: Buffer type = C	2
7	3000001838	BUFFER 1: Buffer type = D	2
7	3000001830	BUFFER 1: Buffer type = E	2
7	3000001831	BUFFER 1: Buffer type = M	2
7	3000001832	BUFFER 1: Buffer type = F	2

R&M Materials Handling, Inc. reserves the right to alter or amend the above information without notice.

HOOSIER CRANE SERVICE COMPANY

R&M Materials Handling, Inc.
4501 Gateway Boulevard
Springfield, Ohio 45502
☎ : (937) 328-5100
FAX: (937) 325-5319

7	3000001833	BUFFER 1: Buffer type = H	2
7	3000001834	BUFFER 1: Buffer type = P	2
7	3000001835	BUFFER 1: Buffer type = I	2
7	3000001836	BUFFER 1: Buffer type = S	2
8	3000002258 (3000001141)	HARDWARE SET	1

HOOSIER CRANE SERVICE COMPANY

R&M Materials Handling, Inc. reserves the right to alter or amend the above information without notice.

R&M Materials Handling, Inc.
4501 Gateway Boulevard
Springfield, Ohio 45502
☎ : (937) 328-5100
FAX: (937) 325-5319

6.5 RT25

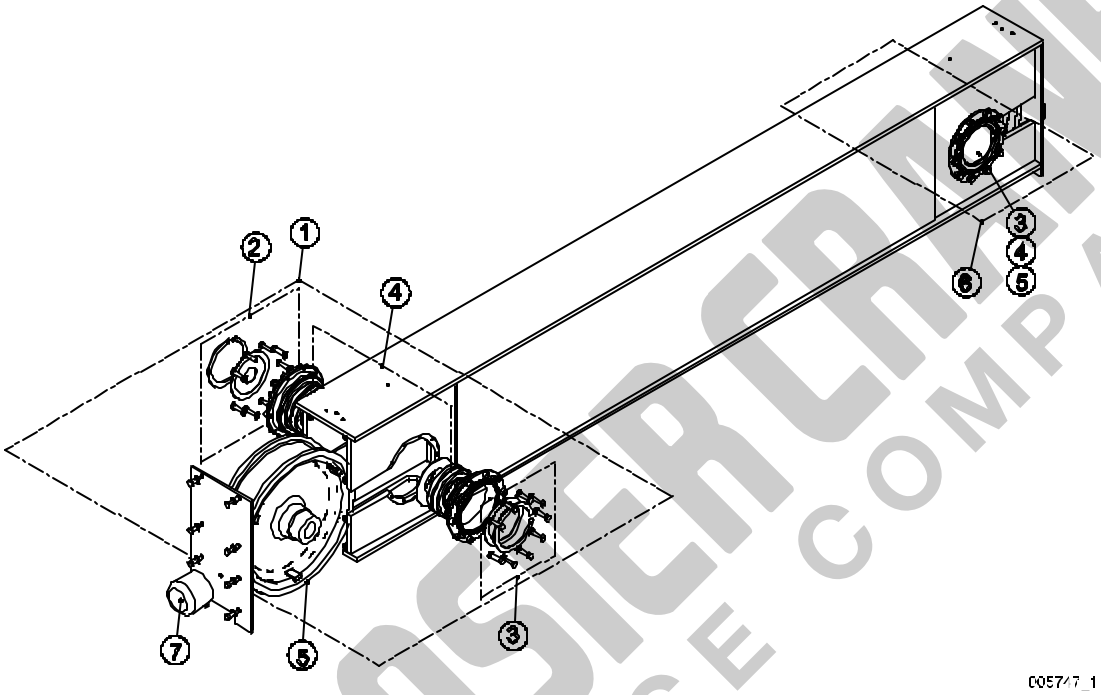

Pos.	Item Code	From	To	Description	Pcs
1	3000001737			WHEEL SET; DRIVE 1: Wheel groove = 55	1
1	3000001738			WHEEL SET; DRIVE 1: Wheel groove = 60	1
1	3000001739			WHEEL SET; DRIVE 1: Wheel groove = 65	1
1	3000001740			WHEEL SET; DRIVE 1: Wheel groove = 70	1
1	3000001741			WHEEL SET; DRIVE 1: Wheel groove = 75	1
1	3000001742			WHEEL SET; DRIVE 1: Wheel groove = 80	1
1	3000001743			WHEEL SET; DRIVE 1: Wheel groove = 85	1
1	3000001744			WHEEL SET; DRIVE 1: Wheel groove = 90	1
1	3000001745			WHEEL SET; DRIVE 1: Wheel groove = 95	1
1	3000001746			WHEEL SET; DRIVE 1: Wheel groove = 100	1
2	3000001758			HARDWARE SET	1
3	3000001757			HARDWARE SET	3
4	3000001759			BEARING SET	2
5	-			WHEEL 1: Wheel groove = 55	

R&M Materials Handling, Inc. reserves the right to alter or amend the above information without notice.

HOOSIER CRANE SERVICE COMPANY

R&M Materials Handling, Inc.
4501 Gateway Boulevard
Springfield, Ohio 45502
☎ : (937) 328-5100
FAX: (937) 325-5319

5	-	WHEEL 1: Wheel groove = 60	
5	-	WHEEL 1: Wheel groove = 65	
5	-	WHEEL 1: Wheel groove = 70	
5	-	WHEEL 1: Wheel groove = 75	
5	-	WHEEL 1: Wheel groove = 80	
5	-	WHEEL 1: Wheel groove = 85	
5	-	WHEEL 1: Wheel groove = 90	
5	-	WHEEL 1: Wheel groove = 95	
5	-	WHEEL 1: Wheel groove = 100	
6	3000001747	WHEEL SET; IDLER 1: Wheel groove = 55	1
6	3000001748	WHEEL SET; IDLER 1: Wheel groove = 60	1
6	3000001749	WHEEL SET; IDLER 1: Wheel groove = 65	1
6	3000001750	WHEEL SET; IDLER 1: Wheel groove = 70	1
6	3000001751	WHEEL SET; IDLER 1: Wheel groove = 75	1
6	3000001752	WHEEL SET; IDLER 1: Wheel groove = 80	1
6	3000001753	WHEEL SET; IDLER 1: Wheel groove = 85	1
6	3000001754	WHEEL SET; IDLER 1: Wheel groove = 90	1
6	3000001755	WHEEL SET; IDLER 1: Wheel groove = 95	1
6	3000001756	WHEEL SET; IDLER 1: Wheel groove = 100	1
7	3000001140	BUFFER 1: Buffer type = B	2
7	3000001837	BUFFER 1: Buffer type = C	2
7	3000001838	BUFFER 1: Buffer type = D	2
7	3000001830	BUFFER 1: Buffer type = E	2
7	3000001831	BUFFER 1: Buffer type = M	2
7	3000001832	BUFFER 1: Buffer type = F	2
7	3000001833	BUFFER 1: Buffer type = H	2

R&M Materials Handling, Inc. reserves the right to alter or amend the above information without notice.

HOOSIER CRANE SERVICE COMPANY

R&M Materials Handling, Inc.
4501 Gateway Boulevard
Springfield, Ohio 45502
☎ : (937) 328-5100
FAX: (937) 325-5319

7	3000001834	BUFFER 1: Buffer type = P	2
7	3000001835	BUFFER 1: Buffer type = I	2
7	3000001836	BUFFER 1: Buffer type = S	2

HOOSIER CRANE SERVICE COMPANY

R&M Materials Handling, Inc. reserves the right to alter or amend the above information without notice.

R&M Materials Handling, Inc.
4501 Gateway Boulevard
Springfield, Ohio 45502
☎ : (937) 328-5100
FAX: (937) 325-5319

6.6 RT32

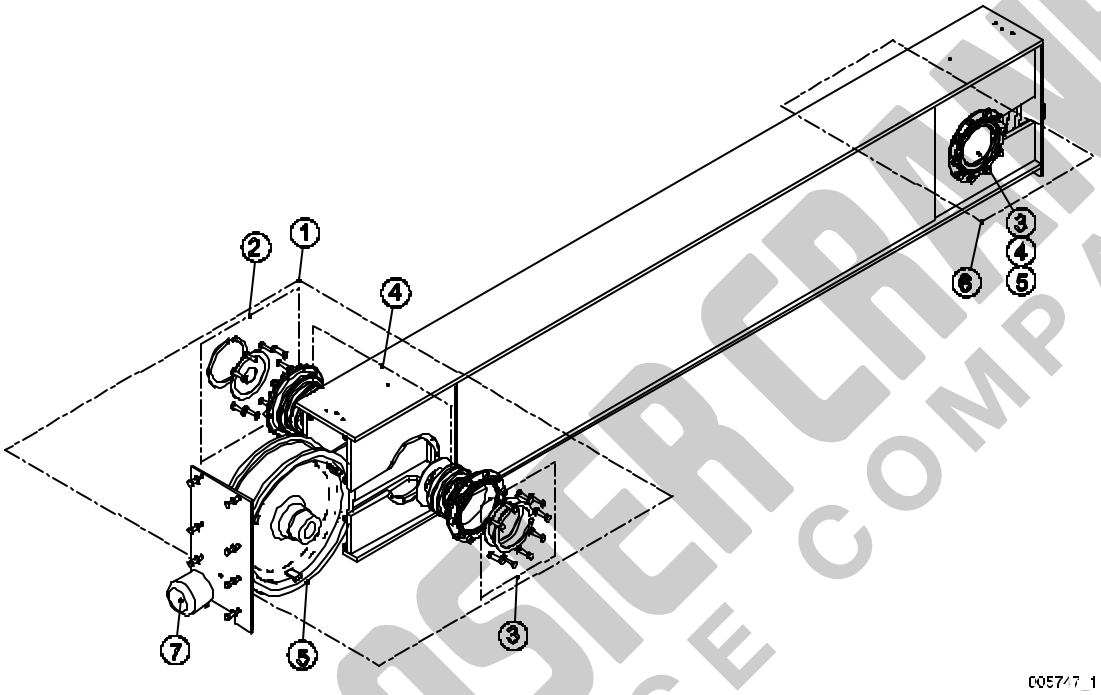

Pos.	Item Code	From	To	Description	Pcs
1	3000001760			WHEEL SET; DRIVE 1: Wheel groove = 55	1
1	3000001761			WHEEL SET; DRIVE 1: Wheel groove = 60	1
1	3000001762			WHEEL SET; DRIVE 1: Wheel groove = 65	1
1	3000001763			WHEEL SET; DRIVE 1: Wheel groove = 70	1
1	3000001764			WHEEL SET; DRIVE 1: Wheel groove = 75	1
1	3000001765			WHEEL SET; DRIVE 1: Wheel groove = 80	1
1	3000001766			WHEEL SET; DRIVE 1: Wheel groove = 85	1
1	3000001767			WHEEL SET; DRIVE 1: Wheel groove = 90	1
1	3000001768			WHEEL SET; DRIVE 1: Wheel groove = 95	1
1	3000001769			WHEEL SET; DRIVE 1: Wheel groove = 100	1
2	3000001758			HARDWARE SET	1
3	3000001757			HARDWARE SET	3
4	3000001759			BEARING SET	2
5	-			WHEEL 1: Wheel groove = 55	

R&M Materials Handling, Inc. reserves the right to alter or amend the above information without notice.

HOOSIER CRANE SERVICE COMPANY

R&M Materials Handling, Inc.
4501 Gateway Boulevard
Springfield, Ohio 45502
☎ : (937) 328-5100
FAX: (937) 325-5319

5	-	WHEEL 1: Wheel groove = 60	
5	-	WHEEL 1: Wheel groove = 65	
5	-	WHEEL 1: Wheel groove = 70	
5	-	WHEEL 1: Wheel groove = 75	
5	-	WHEEL 1: Wheel groove = 80	
5	-	WHEEL 1: Wheel groove = 85	
5	-	WHEEL 1: Wheel groove = 90	
5	-	WHEEL 1: Wheel groove = 95	
5	-	WHEEL 1: Wheel groove = 100	
6	3000001770	WHEEL SET; IDLER 1: Wheel groove = 55	1
6	3000001771	WHEEL SET; IDLER 1: Wheel groove = 60	1
6	3000001772	WHEEL SET; IDLER 1: Wheel groove = 65	1
6	3000001773	WHEEL SET; IDLER 1: Wheel groove = 70	1
6	3000001774	WHEEL SET; IDLER 1: Wheel groove = 75	1
6	3000001775	WHEEL SET; IDLER 1: Wheel groove = 80	1
6	3000001776	WHEEL SET; IDLER 1: Wheel groove = 85	1
6	3000001777	WHEEL SET; IDLER 1: Wheel groove = 90	1
6	3000001778	WHEEL SET; IDLER 1: Wheel groove = 95	1
6	3000001779	WHEEL SET; IDLER 1: Wheel groove = 100	1
7	3000001140	BUFFER 1: Buffer type = B	2
7	3000001837	BUFFER 1: Buffer type = C	2
7	3000001838	BUFFER 1: Buffer type = D	2
7	3000001830	BUFFER 1: Buffer type = E	2
7	3000001831	BUFFER 1: Buffer type = M	2
7	3000001832	BUFFER 1: Buffer type = F	2
7	3000001833	BUFFER 1: Buffer type = H	2

R&M Materials Handling, Inc. reserves the right to alter or amend the above information without notice.

HOOSIER CRANE SERVICE COMPANY

R&M Materials Handling, Inc.
4501 Gateway Boulevard
Springfield, Ohio 45502
☎ : (937) 328-5100
FAX: (937) 325-5319

7	3000001834	BUFFER 1: Buffer type = P	2
7	3000001835	BUFFER 1: Buffer type = I	2
7	3000001836	BUFFER 1: Buffer type = S	2

HOOSIER CRANE SERVICE COMPANY

R&M Materials Handling, Inc. reserves the right to alter or amend the above information without notice.

R&M Materials Handling, Inc.
4501 Gateway Boulevard
Springfield, Ohio 45502
☎ : (937) 328-5100
FAX: (937) 325-5319

6.7 RT50

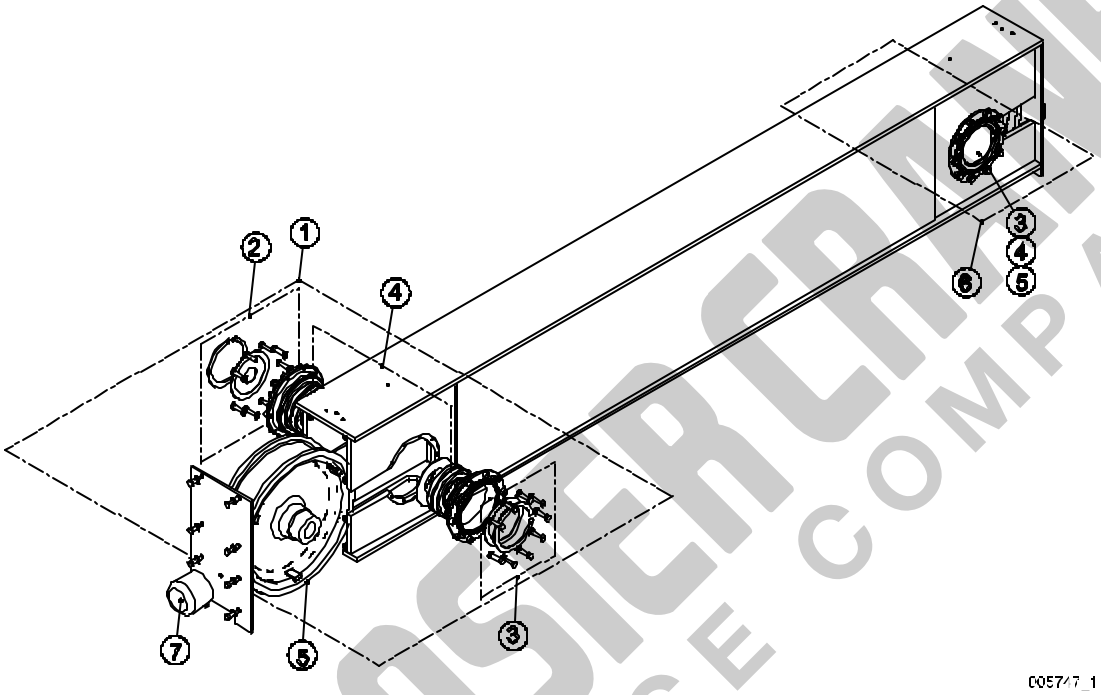

Pos.	Item Code	From	To	Description	Pcs
1	3000001780			WHEEL SET; DRIVE 1: Wheel groove = 55	1
1	3000001781			WHEEL SET; DRIVE 1: Wheel groove = 60	1
1	3000001782			WHEEL SET; DRIVE 1: Wheel groove = 65	1
1	3000001783			WHEEL SET; DRIVE 1: Wheel groove = 70	1
1	3000001784			WHEEL SET; DRIVE 1: Wheel groove = 75	1
1	3000001785			WHEEL SET; DRIVE 1: Wheel groove = 80	1
1	3000001786			WHEEL SET; DRIVE 1: Wheel groove = 85	1
1	3000001787			WHEEL SET; DRIVE 1: Wheel groove = 90	1
1	3000001788			WHEEL SET; DRIVE 1: Wheel groove = 95	1
1	3000001789			WHEEL SET; DRIVE 1: Wheel groove = 100	1
2	3000001803			HARDWARE SET	1
3	3000001800			HARDWARE SET	3
4	3000001805			BEARING SET	2
5	-			WHEEL 1: Wheel groove = 85	

R&M Materials Handling, Inc. reserves the right to alter or amend the above information without notice.

HOOSIER CRANE SERVICE COMPANY

R&M Materials Handling, Inc.
4501 Gateway Boulevard
Springfield, Ohio 45502
☎ : (937) 328-5100
FAX: (937) 325-5319

5	-	WHEEL 1: Wheel groove = 80	
5	-	WHEEL 1: Wheel groove = 55	
5	-	WHEEL 1: Wheel groove = 60	
5	-	WHEEL 1: Wheel groove = 65	
5	-	WHEEL 1: Wheel groove = 70	
5	-	WHEEL 1: Wheel groove = 75	
5	-	WHEEL 1: Wheel groove = 90	
5	-	WHEEL 1: Wheel groove = 95	
5	-	WHEEL 1: Wheel groove = 100	
6	3000001790	WHEEL SET; IDLER 1: Wheel groove = 55	1
6	3000001791	WHEEL SET; IDLER 1: Wheel groove = 60	1
6	3000001792	WHEEL SET; IDLER 1: Wheel groove = 65	1
6	3000001793	WHEEL SET; IDLER 1: Wheel groove = 70	1
6	3000001794	WHEEL SET; IDLER 1: Wheel groove = 75	1
6	3000001795	WHEEL SET; IDLER 1: Wheel groove = 80	1
6	3000001796	WHEEL SET; IDLER 1: Wheel groove = 85	1
6	3000001797	WHEEL SET; IDLER 1: Wheel groove = 90	1
6	3000001798	WHEEL SET; IDLER 1: Wheel groove = 95	1
6	3000001799	WHEEL SET; IDLER 1: Wheel groove = 100	1
7	3000001140	BUFFER 1: Buffer type = B	2
7	3000001837	BUFFER 1: Buffer type = C	2
7	3000001838	BUFFER 1: Buffer type = D	2
7	3000001830	BUFFER 1: Buffer type = E	2
7	3000001831	BUFFER 1: Buffer type = M	2
7	3000001832	BUFFER 1: Buffer type = F	2
7	3000001833	BUFFER 1: Buffer type = H	2

R&M Materials Handling, Inc. reserves the right to alter or amend the above information without notice.

HOOSIER CRANE SERVICE COMPANY

R&M Materials Handling, Inc.
4501 Gateway Boulevard
Springfield, Ohio 45502
☎ : (937) 328-5100
FAX: (937) 325-5319

7	3000001834	BUFFER 1: Buffer type = P	2
7	3000001835	BUFFER 1: Buffer type = I	2
7	3000001836	BUFFER 1: Buffer type = S	2

HOOSIER CRANE SERVICE COMPANY

R&M Materials Handling, Inc. reserves the right to alter or amend the above information without notice.