EFFECTIVE: May 8, 2019

OWNER'S MANUAL

ELECTRIC WIRE ROPE HOIST and TROLLEY RY SERIES

3 Ton and 5 Ton Capacity

Hoist Code and Serial Number

WARNING

This equipment should not be installed, operated or maintained by any person who has not read and understood all the contents of this manual. Failure to read and comply with the contents of this manual can result in serious bodily injury or death, and/or property damage.

HARRINGTON
A KITO GROUP COMPANY

© Harrington Hoists, Inc.
All Rights Reserved

Table of Contents

Section **Page Number**

1.0 Important Information and Warnings…… 4

1.1 Terms and Summary

1.2 Warning Tags and Labels

2.0 Technical Information …… 10

2.1 Specifications

2.2 Dimensions

2.3 Part Names

3.0 Pre-operational Procedures…….. 16

3.1 General Information

3.2 Handling

3.3 Mounting Location

3.4 Assembly, Adjustments and Mounting

3.5 Block Operated Limit Switch (BLS) Adjustment

3.6 Electrical Connections

3.7 Pendant Installation

3.8 Hoist Variable Frequency Drive (VFD) Setup

3.9 Light-Load High Speed Function

3.10 Hoist Load Limiter (LL) Adjustment

3.11 Trolley Variable Frequency Drive (VFD) Setup

3.12 Hoist Upper and Lower Limit Switch (ULLS) Setup

3.13 Pre-operational Checks and Trial Operation

4.0 Operation…….. 44

4.1 Introduction

4.2 Shall’s and Shall Not’s for Operation

4.3 Hoist and Trolley Controls

Section **Page Number**

5.0 Inspection…….. 48

5.1 General

5.2 Inspection Classification

5.3 Frequent Inspection

5.4 Periodic Inspection

5.5 Occasionally Used Hoists and Trolleys

5.6 Inspection Records

5.7 Inspection Methods and Criteria

6.0 Maintenance & Handling…….…… 61

6.1 Count/Hour Meter

6.2 Lubrication

6.3 Lubrication – Hoist Gearbox

6.4 Hoist Motor Brake

6.5 Trolley Brake Adjustment

6.6 Wire Rope, Reeving and Adjustment

6.7 Storage

6.8 Outdoor Installation

6.9 Operational Environment

7.0 Troubleshooting ……..…… 80

7.1 General Troubleshooting

7.2 VFD Troubleshooting

7.3 VFD Error Rest and Restart

7.4 VFD Monitoring, Error Trace and Error History

8.0 Warranty…..……101

9.0 Parts List..……...……102

1.0 Important Information and Warnings

1.1 Terms and Summary

This manual provides important information for personnel involved with the installation, operation and maintenance of this product. Although you may be familiar with this or similar equipment, it is strongly recommended that you read this manual before installing, operating or maintaining the product.

Danger, Warning, Caution and Notice - Throughout this manual there are steps and procedures that can present hazardous situations. The following signal words are used to identify the degree or level of hazard seriousness.

⚠ DANGER Danger indicates an imminently hazardous situation which, if not avoided, ***will*** result in ***death or serious injury***, and property damage.

⚠ WARNING Warning indicates an imminently hazardous situation which, if not avoided, ***could*** result in ***death or serious injury***, and property damage.

⚠ CAUTION Caution indicates a potentially hazardous situation which, if not avoided, ***may*** result ***minor or moderate injury*** or property damage.

NOTICE Notice is used to notify people of installation, operation, or maintenance information which is important but not directly hazard-related.

NOTICE

INTENDED USE OF HOIST/TROLLEY HOIST and Owner's Manual

"The RY hoists and trolley hoists are intended only for vertical lifting service of freely suspended, unguided loads. In addition to lifting service of freely suspended, unguided loads, RY trolley hoists are to be used to traverse these loads on a single girder beam.

The RY hoist and trolley hoists are not intended to lift greater than rated loads, lift, support or transport people nor lift loads over people.

The RY hoist and trolley hoists are intended to be operated by persons who have read and understood the operation section of the RY owner's manual, all warnings and are familiar with the RY hoist/trolley hoist controls."

⚠ CAUTION

These general instructions deal with the normal installation, operation, and maintenance situations encountered with the equipment described herein. The instructions should not be interpreted to anticipate every possible contingency or to anticipate the final system, crane, or configuration that uses this equipment. For systems using the equipment covered by this manual, the supplier and owner of the system are responsible for the system's compliance with all applicable industry standards, and with all applicable federal, state and local regulations/codes.

This manual includes instructions and parts information for the RY trolley hoist. Therefore, all instructions and parts information may not apply to any one type or size of specific trolley hoist. Disregard those portions of the instructions that do not apply.

Record your trolley hoist's Product Code and Serial Number on the front cover of this manual for identification and future reference to avoid referring to the wrong manual for information or instructions on installation, operation, inspection, maintenance, or parts.

Use only Harrington authorized replacement parts in the service and maintenance of this trolley.

⚠ WARNING

Equipment described herein is not designed for and **MUST NOT** be used for lifting, supporting, or transporting people, or for lifting or supporting loads over people.

Equipment described herein should not be used in conjunction with other equipment unless necessary and/or required safety devices applicable to the system, crane, or application are installed by the system designer, system manufacturer, crane manufacturer, installer, or user.

Modifications to upgrade, rerate, or otherwise alter this equipment shall be authorized only by the original equipment manufacturer.

Equipment described herein may be used in the design and manufacture of cranes or monorails. Additional equipment or devices may be required for the crane and monorail to comply with applicable crane design and safety standards. The crane designer, crane manufacturer, or user is responsible to furnish these additional items for compliance. Refer to ANSI/ASME B30.17, “Safety Standard for Top-Running Single Girder Cranes”; ANSI/ASME B30.2 “Safety Standard for Top-Running Double-Girder Cranes”; and ANSI/ASME B30.11 “Safety Standard for Underhung Cranes and Monorails”.

Hoists, trolleys and cranes, used to handle hot molten material may require additional equipment or devices. Refer to ANSI Z241.2, “Safety Requirements for Melting and Pouring of Metals in the Metalcasting Industry”.

Electrical equipment described herein is designed and built in compliance with Harrington's interpretation of ANSI/NFPA 70, “National Electrical Code”. The system designer, system manufacturer, crane designer, crane manufacturer, installer, or user is responsible to assure that the installation and associated wiring of these electrical components is in compliance with ANSI/NFPA 70, and all applicable Federal, State and Local Codes.

Failure to read and comply with any one of the limitations noted herein can result in serious bodily injury or death, and/or property damage.

⚠ DANGER

HAZARDOUS VOLTAGES ARE PRESENT IN THE CONTROL BOX, OTHER ELECTRICAL COMPONENTS, AND CONNECTIONS BETWEEN THESE COMPONENTS.

Before performing ANY mechanical or electrical maintenance on the equipment, de-energize (disconnect) the main switch supplying power to the equipment; and lock and tag the main switch in the de-energized position. Refer to ANSI Z244.1, "Personnel Protection – Lockout/Tagout of Energy Sources".

Hoist incorporates a VFD as well as a Capacitor. Therefore, DO NOT perform ANY mechanical or electrical maintenance within 5 minutes of powering down to allow time for the capacitor inside the VFD to discharge. DO NOT perform any voltage or insulation resistance tests with a meg ohmmeter when the VFD is connected to the electrical circuit.

Only trained and competent personnel should inspect and repair this equipment.

⚠ DANGER

The VFD is designed in Harrington Hoists exclusive specifications. Do **NOT** use other than Harrington Hoist, Inc. – authorized VFD.

- Do **NOT** modify the VFD.
- Do **NOT** change the wiring.
- Do **NOT** perform a withstand voltage test or measurement of insulating resistance with the VFD connected.
- Do **NOT** shut down the power supply during operation.
- Do **NOT** connect the power supply to the output side of the VFD.

Before performing parameter change or maintenance of the VFD, read this owner's manual and observe the information contained herein.

Parameter change and maintenance must be performed by a competent person with experience and expertise of handling the rope hoist and VFD.

The product is energized during a parameter change or maintenance of the VFD. Do **NOT** remove the cover of the VFD. Do **NOT** touch the circuit board or electrical components around the VFD.

Each hoist heats up during operation. Do **NOT** maintain and inspect the electrical components for 30 minutes after a stop of operation.

When handling the VFD, provide protection for Electrostatic Discharge (ESD).

Do **NOT** perform maintenance and inspection of peripheral parts (excluding the VFD) within 5 minutes after de-energizing.

Failure to comply with the instructions may lead to an electric shock, burns, malfunction, breakdown or VFD damage, and even may cause serious or even fatal injury.

NOTICE

It is the responsibility of the owner/user to install, inspect, test, maintain, and operate a trolley hoist in accordance with ANSI/ASME B30.16, “Safety Standard for Overhead Hoists”, OSHA Regulations and ANSI/NFPA 70, "National Electric Code". If the trolley hoist is installed as part of a total lifting system, such as an overhead crane or monorail, it is also the responsibility of the owner/user to comply with the applicable ANSI/ASME B30 volume that addresses that type of equipment.

It is the responsibility of the owner/user to have all personnel that will install, inspect, test, maintain, and operate a trolley hoist read the contents of this manual and applicable portions of ANSI/ASME B30.16, “Safety Standard for Overhead Hoists”, OSHA Regulations and ANSI/NFPA 70, “National Electric Code”. If the trolley is installed as part of a total lifting system, such as an overhead crane, the applicable ANSI/ASME B30 volume that addresses that type of equipment must also be read by all personnel.

If the trolley hoist owner/user requires additional information, or if any information in the manual is not clear, contact Harrington or the distributor of the trolley. Do **NOT** install, inspect, test, maintain, or operate this trolley hoist unless this information is fully understood.

A regular schedule of inspection of the trolley hoist in accordance with the requirements of ANSI/ASME B30.16 should be established and records maintained.

1.2 Warning Tag and Labels

The warning tag illustrated below in **Figure 1-1** is supplied with each RY hoist and trolley hoist shipped from the factory. If the tag is not attached to the pendant cord for your hoist/trolley, order a tag from your dealer and install it. Read and obey all warnings attached to this Hoist. Tag is not shown actual size.

Figure 1-1 Warning Tag Attached to Hoist

2.0 Technical Information

NOTE: Throughout this section the symbol "①" is used as a place holder for the trolley hoist voltage. The available trolley hoist voltages are listed in Section 2.1.1 that follows.

2.1 Specifications

2.1.1 Product Code:

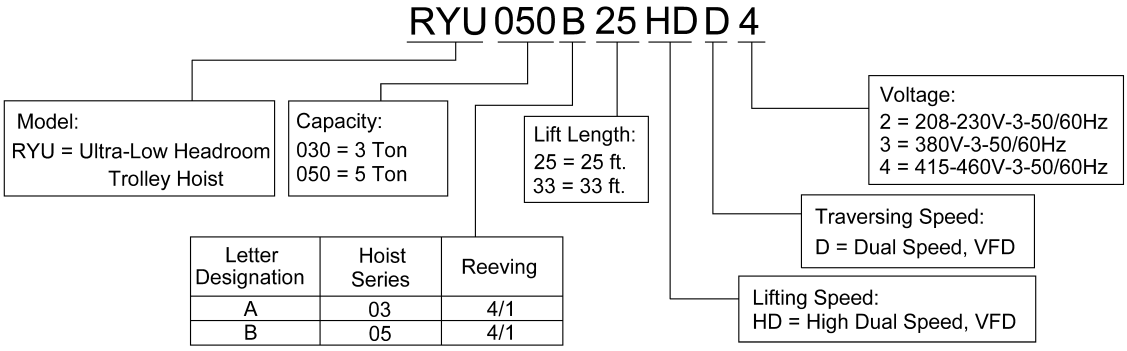

2.1.2 Operating Conditions and Environment

Temperature Range:	-4° to +104°F (-20° to +40°C)
Humidity:	90% RH or less (no condensation)
Electrical Enclosure Rating:	IP55
Motors and Pendant:	IP65
Speed:	Dual – Variable Frequency Drive (VFD)
Supply Voltage:	208V- 230V or 415-460V-3ph-50/60Hz
Control Voltage:	110V-1ph-60Hz (Optional: 24V-1ph-60Hz)
Noise Rating:	less than 85 dba at full speed (A scale: measured 1 meter away from electric wire rope hoist)

Table 2-1 Hoist and Trolley Duty Ratings

Trolley Hoist Capacity Rating			3T & 5T
Service Group		ASME	H4
		ISO	M5
		FEM	2m
Intermittent Use	Hoist	Ratio of Intermittence	60 (40/20)
		Start Ups per Hour	240
		Cycles per Hour	40
	Trolley	Ratio of Intermittence	30 (20/10)
		Start Ups per Hour	180
		Cycles per Hour	30
Dual Speed Motors	Start Ups per Hour	Main Speed	1/3 (33.3% of total number of start-ups per hour)
		Low Speed	2/3 (66.7% of total number of start-ups per hour)
	Daily Run Time	Main Speed	2/3 (66.7% of the average daily running time)
		Low Speed	1/3 (33.3% of the average daily running time)
Temporary Use	Running Time at Main Speed (min.)		30
	Running Time at Low Speed (min.)		3.5
	Maximum number of starts-ups per hour		10
Motor Insulation Class – Hoist and Trolley.			F type
Lifting Brake Capacity			150% capacity or more

Table 2-2 Ultra-Low Headroom Trolley Hoists Hoist Specifications									
Capacity (Ton)	Product Code	Lift (ft.)	Reeving (Parts/ reeving)	Rope Dia. (mm)	Lifting Motor 3 Phase - 50/60Hz				
					Lifting Speed[1] (ft/min)		Output (Hp)	Rated Current[2] (amps)	
					Initial High/Low Speed	No Load High Speed		@208-230V/ 60Hz	@415- 460V/ 60Hz
3	RYU030A25HDD①	25	4/1	9	26/4.3	39	6.7	24.7	12.1
	RYU030A33HDD①	33							
5	RYU050B25HDD①	25					10.7	36.5	18.3
	RYU050B33HDD①	33							

1) Low and high speeds are adjustable
2) Current values based on 250 kVA power supply

Table 2-3 Ultra-Low Headroom Trolley Hoists Trolley Specifications							
Capacity (Ton)	Product Code	Flange Range B (in)	Traversing Motor 3 Phase – 50/60Hz				Net Weight (lbs)
			Traversing Speed[2] (ft/min)	Output (Hp)	Rated Current[2] (amps)		
			Initial High/Low Speed		@208-230V/ 60Hz	@415-460V/ 60Hz	
3	RYU030A25HDD①	4.92-13.78	66/11	0.54	2.1	1.4	960
		13.79-19.68					971
	RYU030A33HDD①	4.92-13.78					1048
		13.79-19.68					1059
5	RYU050B25HDD①	4.92-13.78					993
		13.79-19.68					1004
	RYU050B33HDD①	4.92-13.78					1092
		13.79-19.68					1103

2) Current values based on 250 kVA power supply

2.2 Dimensions

Table 2-4 Ultra-Low Headroom Trolley Hoist Dimensions

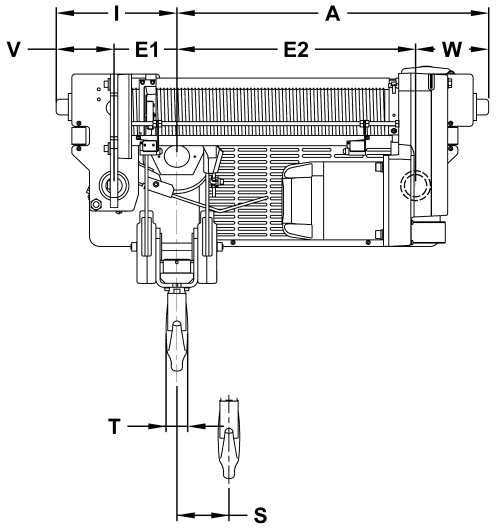

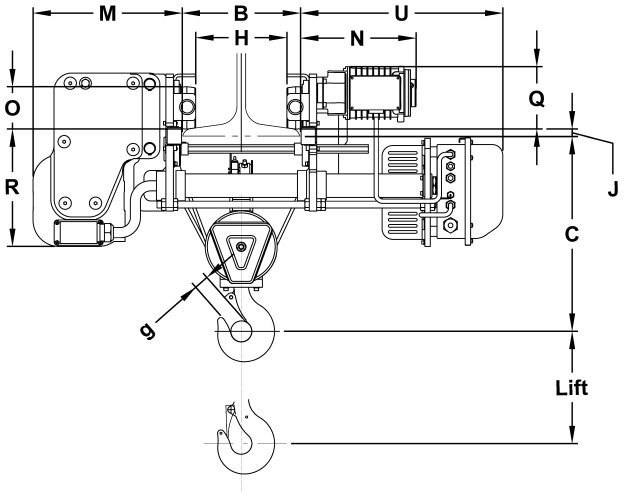

Capacity (Tons)	Product Code	Lift (ft)	Flange Range B (in)	Dimensions (in)																	
				A	C	E1	E2	g	H	I	J	M	N	O	Q	R	S	T	U	V	W
3	RYU030A25HDD①	25	4.92-13.78	36.3	22.8	7.3	27.8	1.7	B-3.1	14.1	1.2 or less	17.4	13.5	4.9	7.3	13.7	6.3	2.1	32.4-23.6	6.7	8.5
			13.79-19.68																29.5-23.6		
	RYU030A33HDD①	33	4.92-13.78	44.7			36.1										8.4		32.4-23.6		
			13.79-19.68																29.5-23.6		
5	RYU050B25HDD①	25	4.92-13.78	36.3	23.2	7.3	27.8	1.8	B-3.1	14.1	1.2 or less	17.4	13.5	4.9	7.3	13.7	6.3	2.5	32.4-23.6	6.7	8.5
			13.79-19.68																29.5-23.6		
	RYU050B33HDD①	33	4.92-13.78	44.7			36.1										8.4		32.4-23.6		
			13.79-19.68																29.5-23.6		

Table 2-7 Hook Dimension*

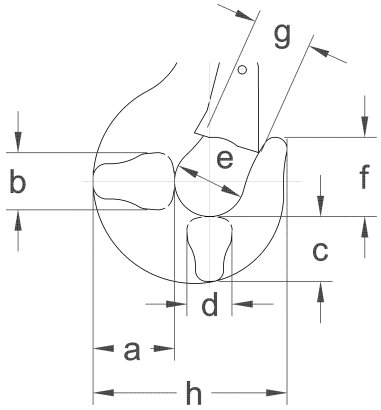

Units = inch

Capacity (Tons)	Product Code	a (in)	b (in)	c (in)	d (in)	e (in)	f (in)	g (in)	h (in)
3	RYU030A25HDD①	2.6	2.1	2.3	1.8	2.5	2.8	1.7	6.7
	RYU030A33HDD①								
5	RYU050B25HDD①	3.2	2.5	2.6	2.1	2.8	3.2	1.8	7.6
	RYU050B33HDD①								

Notes: *Refer to Section 5, **Table 5-6** for inspection dimensions and limits.

Table 2-8 Reaction Forces at Rated Load
Ultra-Low Headroom Monorail Trolley

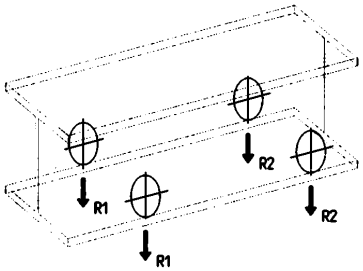

Capacity (Tons)	Product Code	Flange Range B (in)	R1 (lbs)	R2 (lbs)
3	RYU030A25HDD①	4.92-13.78	2994	789
		13.79-19.68	2999	790
	RYU030A33HDD①	4.92-13.78	3182	645
		13.79-19.68	3187	646
5	RYU050B25HDD①	4.92-13.78	4751	1252
		13.79-19.68	4755	1253
	RYU050B33HDD①	4.92-13.78	5032	1020
		13.79-19.68	5037	1021

Table 2-9 Trolley Wheel Dimensions

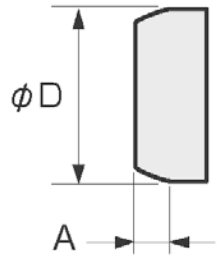

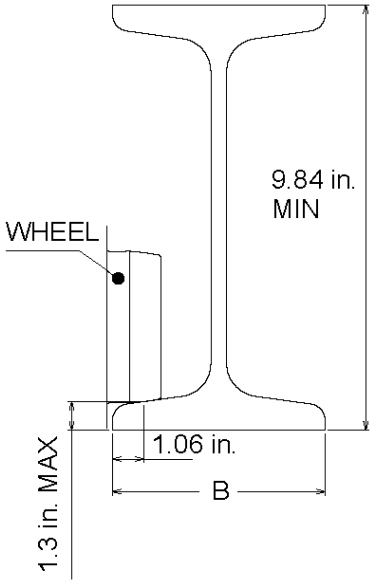

Capacity (Tons)	Product Code	A (in)	φD (in)
3	RYU030A25HDD①	0.79	3.86
	RYU030A33HDD①		
5	RYU050B25HDD①	0.79	3.86
	RYU050B33HDD①		

2.3 Part Names

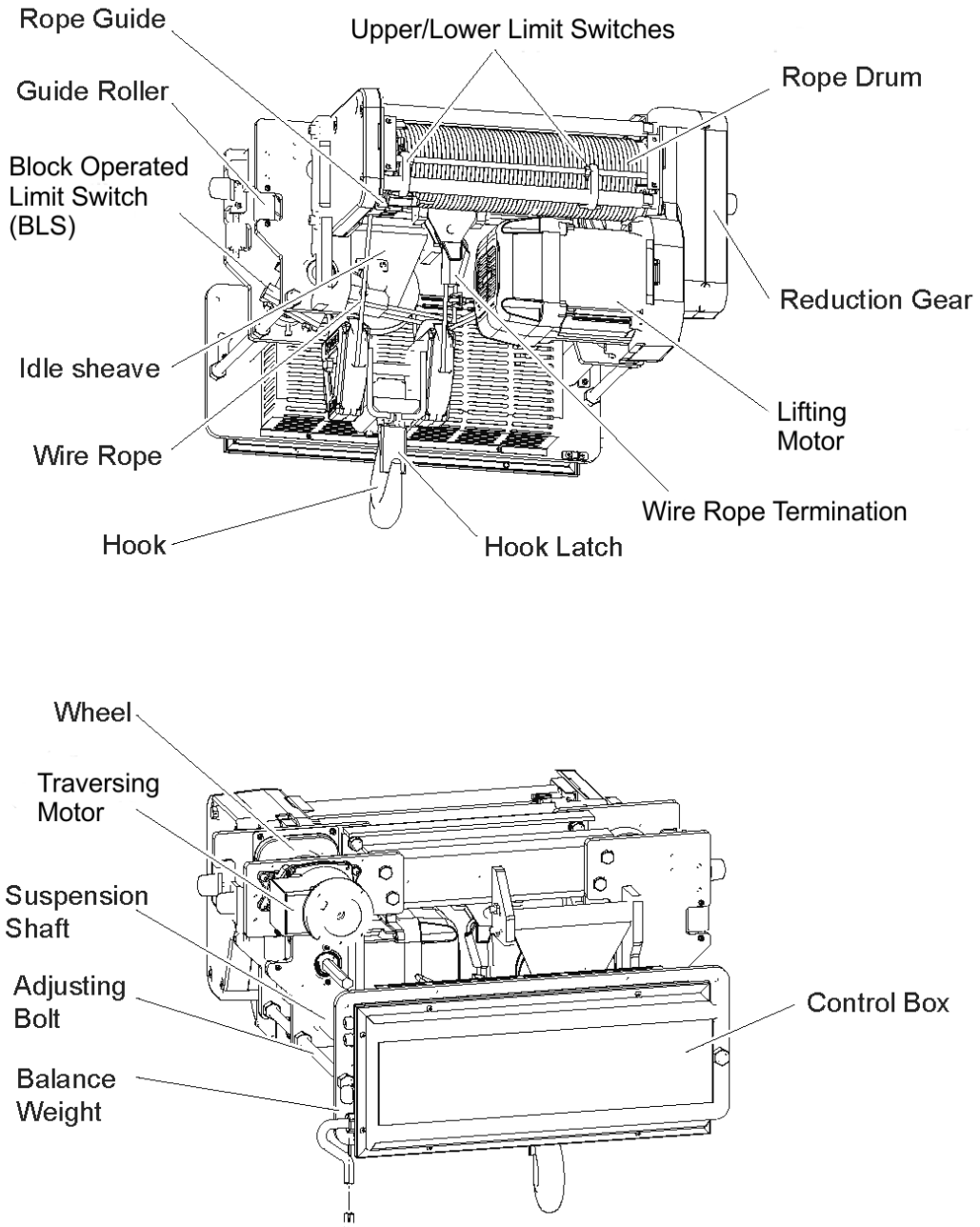

Figure 2-1 RY Part Names

3.0 Pre-operational Procedures

3.1 General Information

3.1.1 When the RY trolley hoist is incorporated into lifting systems utilizing other equipment, follow and complete all pre-operational procedures and instructions provided with the equipment. Special wiring considerations must also be taken to complete the integration of the RY trolley hoist into the system.

3.1.2 The RY hoist is delivered pre-assembled on a plastic-covered pallet/skid as shown in **Figure 3-1**. During shipment and storage prior to installation, the trolley hoist should be kept between –4° and +104°F (-20° and +40°C) and the relative humidity must not exceed 90%. The standard packaging is not watertight and rainproof.

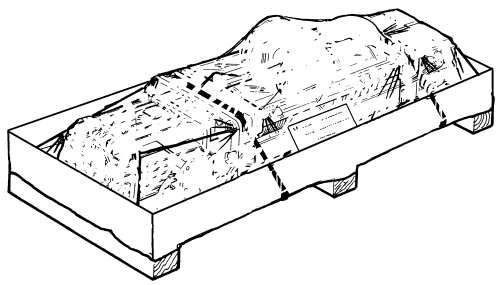

Figure 3-1 Packaged as delivered

3.1.3 The RY trolley hoist is shipped with the wire rope installed and reeved from the wire rope drum through the return sheaves and hook block to the dead end, reference **Section 6.6**.

3.1.4 The RY trolley hoist is shipped pre-lubricated with the correct amount of lubricant in the gear box(s). Follow the lubrication requirements in **Section 6.2** after the trolley hoist is placed into service.

3.2 Handling

3.2.1 Transportation – When moving the trolley hoist prior to installation, do **NOT** remove the trolley hoist from the pallet. Always move trolley hoist utilizing a fork lift, pallet jack or hoist/crane system. Do **NOT** stack or place anything on top of the trolley hoist or crate. Avoid swinging and unbalanced conditions.

3.2.2 Lift points – When a pallet is not practical, use of the RY lifting points or the trolley frame is acceptable. The RY trolley hoist is equipped with threaded lifting lugs in the horizontal tubes (see **Figure 3-2** and **Figure 3-3**). While lifting do **NOT** support the trolley hoist any other way.

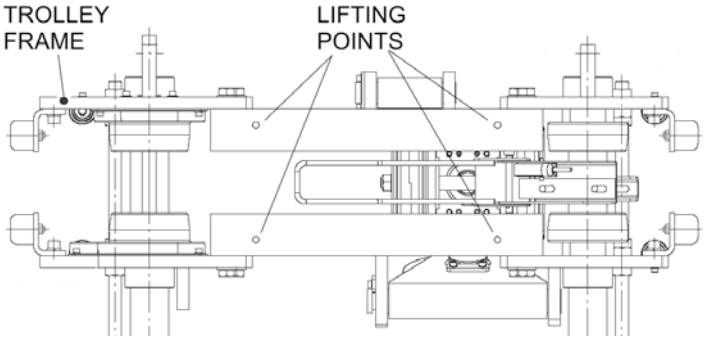

Figure 3-2 Lift Points for Trolley Hoist, 4 places. (M12mm Lifting Lugs Included)

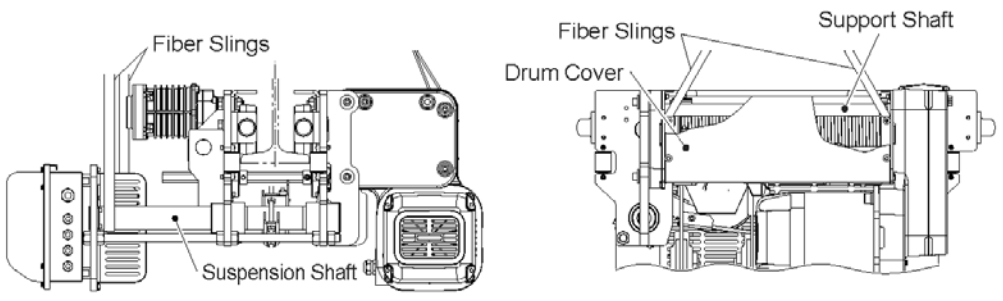

Figure 3-3 Sling Lifting Method

3.3 Mounting Location

3.3.1 **WARNING** Prior to mounting the RY trolley hoist ensure that the wire rope has not loosened on the wire rope drum. Due to vibration or other impacts during transportation of the product, the wire rope wound on the Rope Drum may be loosened. Check for "slack" in the wire rope on the drum. Remove all "slack" from the wire rope on the drum.

1) Pull the load side of the Wire Rope wound on the Rope Drum to remove slack and confirm that the Wire Rope is settled in the groove of the Rope Drum.

2) If slack still remains, move the loosened part of the Wire Rope toward the Rope Guide side so as to gradually remove the slack. When the slack reaches the Rope Guide, pull the Wire Rope to completely remove the slack.

3) If slack cannot be removed by the steps above, detach the Rope Guide and remove the slack and entanglement of the Wire Rope.

3.3.2 For the procedure of installation and removal of the Rope Guide, see **Section 6.6.6** "Wire Rope Installation/Rope Guide Installation**"**.

3.3.3 **WARNING** Prior to mounting the RY trolley hoist ensure that both the trolley beam lower flange rating meets or exceeds the trolley hoist reaction forces listed in **Table 2-8** and the beam supporting structure is adequate to support the trolley hoist and its load. If necessary consult a professional that is qualified to evaluate the adequacy of the suspension location and its supporting structure.

3.3.4 Ensure that there is adequate vertical and horizontal clearance along the entire range of the trolley hoist's motion as shown in **Figure 3-4**.

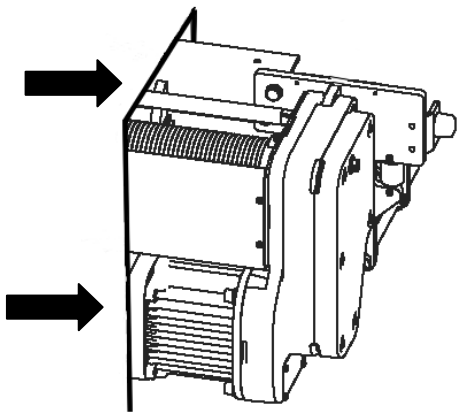

Figure 3-4 Trolley Hoist Clearances

3.3.5 **NOTICE** See **Section 6.8** for outdoor installation considerations.

3.4 Assembly, Adjustments and Mounting

⚠WARNING When installing the trolley hoist on a beam, ALWAYS raise the hoist into position with the trolley assembled together and securely attached to a pallet/skid. Raise the trolley hoist with a forklift, lifting platform, or other similar means. NEVER use slings to raise and install the trolley hoist onto the beam. Using a forklift or another suitable means, position the pallet/skid so that the horizontal axis of the beam is parallel to the horizontal axis of the trolley hoist as shown in **Figure 3-6**.

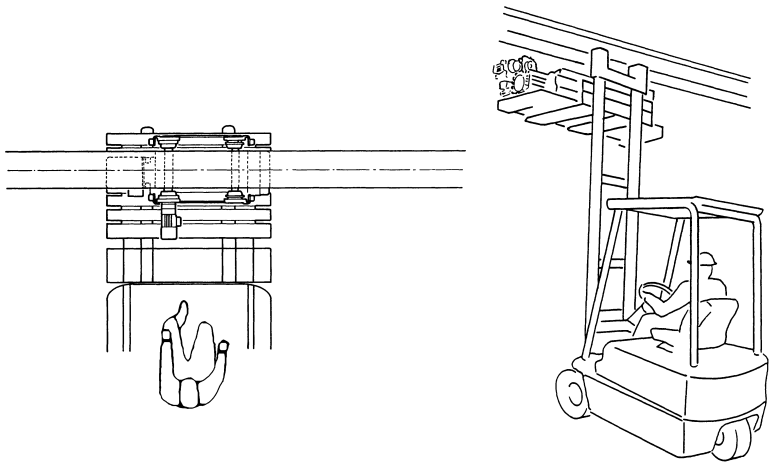

Figure 3-6 Trolley Secured to Pallet/skid for Installation

Note: Unless specified when ordered, the RY trolley hoist is factory set to accommodate a 4.92 to 13.78 inch beam flange. A wider flange range for beams with flange widths 13.79 to 19.68 inches is available.
The RY is equipped with the maximum counterweight necessary for the standard and optional flange range, 4.92 to 19.68 inch, for each hoist capacity.

3.4.1 RY Trolley Hoist Installation

1) Make sure the mounting location complies with **Section 3.3**.

2) Install any additional devices, if any (power supply cords or pendants, for instance – see **Section 3.7**) onto the trolley hoist. If the trolley hoist is not secured to a pallet, place and secure it to one making sure that the trolley hoist is completely stable as shown in **Figure 3-6**.

3) **⚠CAUTION** Only move/adjust the Trolley Frame "adjustment side" (side with trolley motor) of the trolley. The "adjustment side" is easily identifiable as the trolley motor is bolted to it. Never loosen the Adjusting Bolt Nuts on the "fixed side" or attempt to move the "fixed side" of theTrolley Frame. See **Figure 3-7** for Trolley Frame identification. Loosen the Socket Bolt attached to the lower side of the boss on the Trolley Frame "adjustment side" (trolley motor) side as shown in **Figure 3-7 and Figure 3-8**.

4) Before attempting to install the trolley hoist, verify beam width, "B" and the "A" dimension as shown in **Figure 3-10**. Adjust flange width if necessary.

5) To adjust the flange width of the trolley, loosen the Socket Bolt located on the underside of the "adjustment side" of the Trolley Frame on each as shown in **Figure 3-7** and **Figure 3-8**.

To widen the flange width: Loosen the adjusting nut on the outer side of the trolley frame (adjustment side) and tighten the nut on the inner side of the trolley frame (adjustment side) shown in **Figures 3-8.** This must be performed uniformly on both Adjusting Bolt locations on each end of the hoist as shown in **Figures 3-7.** Confirm dimension "A" as referenced in **Figure 3-10**.

To narrow the flange width: Loosen the adjusting nut on the inner side of the trolley frame (adjustment side) and tighten the nut on the outer side of the trolley frame (adjustment side) shown in **Figures 3-8.** This must be performed uniformly on both Adjusting Bolt locations on each end of the hoist as shown in **Figures 3-7.** Confirm dimension "A" as referenced in **Figure 3-10**.

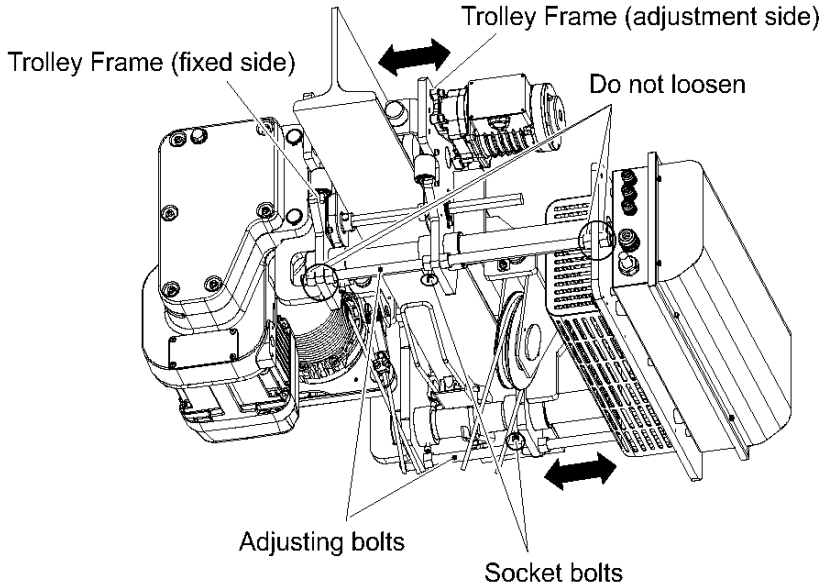

Figure 3-7 Adjusting distance between frames to accommodate beam

6) If the end of the runway beam is accessible, slide the trolley hoist onto the end of the runway beam. Check the Trolley Wheel to Guide Roller clearance, "t". "t" = 5/64 inch as shown in **Figure 3-10**. Adjust the Trolley Frame as necessary to meet the Trolley Wheel to Guide Roller clearance, "t". (**See Section 3.4.1 Step 5 for proper adjustment procedure**).

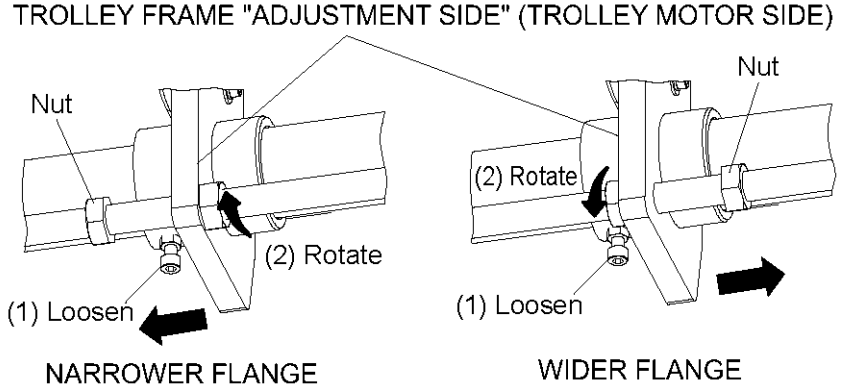

Figure 3-8 Loosen the Adjusting Bolt Nuts and Socket Bolts

7) If the end of the runway beam is not accessible, the trolley flange width will need to be opened up to allow the Trolley Hoist to fit around the beam. (**See Section 3.4.1 Step 5 for proper procedure to widen flange width.**)

8) Once the hoist is in position with the beam flange wheel running surface, the trolley flange can be made narrowed to accommodate the respective beam flange width. Confirm dimension "t" = 5/64 inch as shown in **Figure 3-10.** (**See Section 3.4.1 Step 5 for proper procedure to widen flange width. Figures 3-8, 3-9 and 3-10**)

9) After adjusting the Trolley Frames for the correct beam flange width, tighten the Socket Bolt that was loosened in step 3) and tighten the Adjusting Bolt Nut.

a. Socket Bolt Tightening Torque: 80 lbf-inch.

b. Adjusting Bolt Nut Tightening Torque: 111 lbf-ft

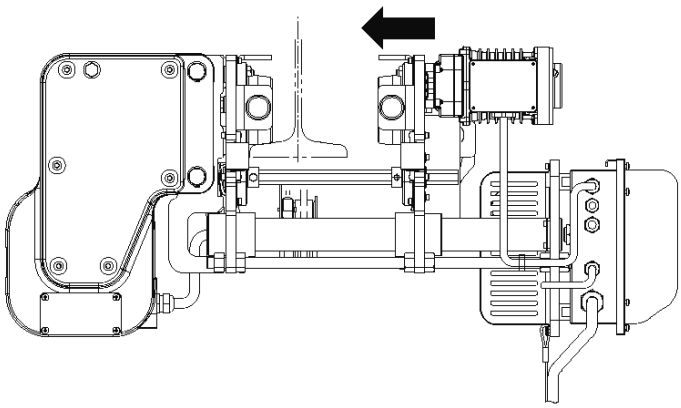

Figure 3-9 Trolley Sliding onto Beam

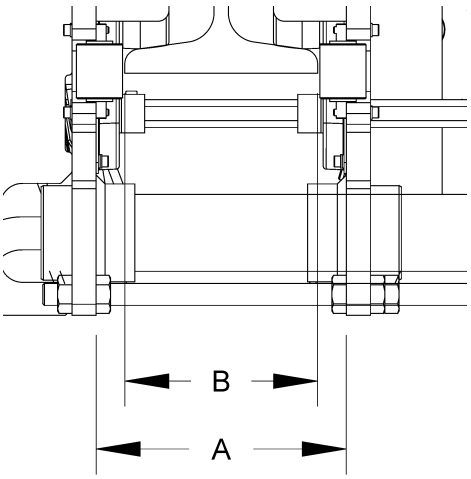

A = TROLLEY PLATE SPACING

B = BEAM FLANGE WIDTH

Note: A (trolley plate spacing) = B (beam flange width) + 2 inches (inc. 5/64 in/2mm space between each trolley wheel and guide roller)

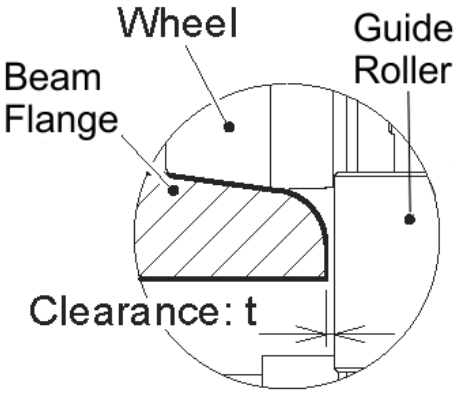

t = 5/64 in. (2mm)

Figure 3-10 Trolley Flange Adjustment Example

3.5 Block Operated Limit Switch (BLS) Adjustment

The BLS must be adjusted to where the Hoist and the Hook Block do not interfere with each other. The BLS operates when the Upper/Lower Limit Switch does not function due to failure, improper setting, or abnormal operation. The load can be lowered after the BLS has been activated.

1) Because the BLS is attached to the Suspension Shaft, its position must be adjusted after installing the hoist on the beam.

2) Adjust the position of the BLS to the center of the beam flange or the position where the center of the Hook Block and the BLS can make contact, then set the angle of the lever to the position where the “notch” in the BLS frame is horizontal (parallel to the beam flange) as shown in **Figure 3-11**.

3) Tighten the nuts to a torque setting of 20.7 lbf-ft (28 N•m).

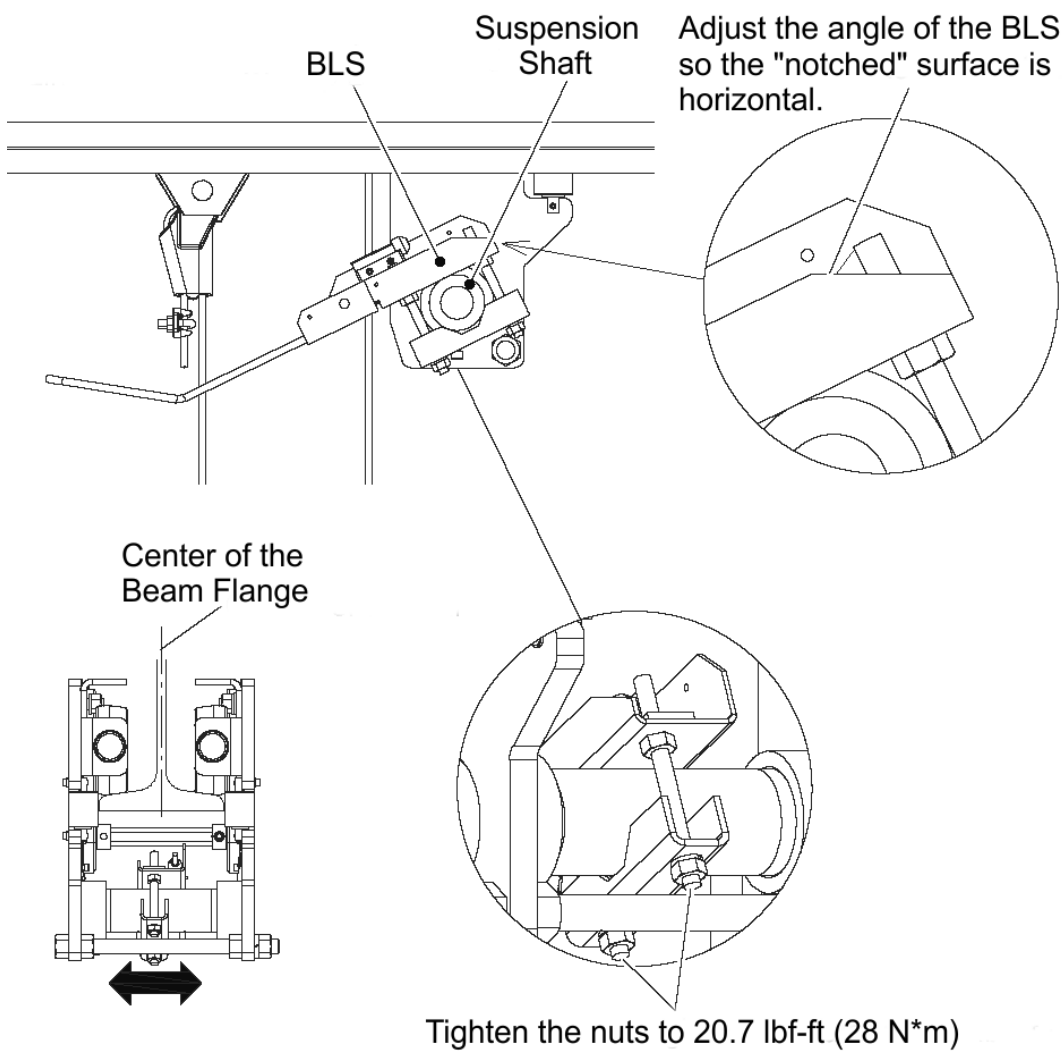

Figure 3-11 Aligning BLS with beam center

3.6 Electrical Connections

3.6.1 **⚠WARNING** If the Trolley hoist was supplied without a Power Supply Cable. The installer must use a UL List power supply cable Type SJ, SJT, SO, SOO, SOOW, ST, STO or of a type at least equally servicable for the particular application. Rated 90C, 600V minimum. Refer to total AMP draw and NEC® (ANSI/NFPA 70, "National Electric Code") guidelines when sizing appropriate Power Supply Cable gauge. Always consult with a qualified person when appropriate Power Supply Cable sizing is in question.

3.6.2 **⚠CAUTION** Ensure that the voltage of the electric power supply is proper for the trolley hoist.

3.6.3 **⚠CAUTION** Do NOT apply electronic soft-start control or voltage varying controls to the RY. Use of such devices may cause the motor brake and other electrical components to malfunction. The RY lifting and traversing motions are variable frequency drive (VFD) controlled.

3.6.4 **⚠DANGER** Before proceeding, ensure that the electrical supply for the hoist or trolley has been de-energized (disconnected). Lock out and tag out in accordance with ANSI Z244.1 "Personnel Protection -Lockout/Tagout of Energy Sources".

3.6.5 **⚠DANGER** To avoid a shock hazard, **DO NOT** perform **ANY** mechanical or electrical maintenance on the trolley or hoist within 5 minutes of de-energizing (disconnecting) the trolley or hoist. This time allows the internal VFD capacitor to safely discharge.

3.6.6 **⚠DANGER** **Do NOT** remove power to the trolley hoist during operation.

3.6.7 **⚠CAUTION** All RY trolley hoists are dual speed hoists and trolleys that are equipped with VFD's. The VFD's are used to control the high and low lifting and traversing speeds. The speeds come preset from the factory (See **Table 3-5**). Speed (frequency) can be customized. Refer to **Section 3.8.13** for hoist specific speed ranges and instructions and **Section 3.11.5** for trolley traversing speed ranges and instructions.

3.6.8 Installing Power Supply Cord

1) Refer to **Figure 3-12** and the wiring diagram provided with the Hoist.

2) Remove Control Cover.

3) Multiple cable fittings/clamps are available for use on both sides of the Control Panel for the Power Supply Cord. Loosen the selected cable fitting/clamp and insert the Power Supply Cable. Pull through enough cable to reach the power supply terminal and securely tighten the cable fitting as shown in **Figure 3-12**.

4) Pull the Power Cable to check that it does not move in the cable fitting/clamp.

5) Connect the 3 phase power leads (L1, L2 and L3) and the ground lead of the Power Supply Cable to the power supply terminals, Red, White, Black and Green/Yellow (ground). Make sure the terminals are securely tightened and each lead is completely isolated as shown in **Figure 3-12**.

6) Connection to Electrical Power Source - The Red, White and Black wires of the Power Supply Cable should be connected to an Electric Power Disconnect Switch or Circuit Breaker.

7) Fuse/Breaker Capacity -The hoist's power supply should be equipped with current overload protection such as fuses, which should be selected for 110% to 120% of total listed full load amperage, and should be dual element time-delay fuses. Refer to the motor nameplate for the full load amperage draw.

8) **⚠DANGER** Grounding - An improper or insufficient ground connection creates an electrical shock hazard when touching any part of the hoist or trolley. In the Power Supply

Cable the ground wire will be either Green with Yellow stripe or solid Green. It should always be connected to a suitable ground connection. Do not paint the trolley wheel running surfaces of the beam as this can affect grounding.

9) Replace the Control Cover. Be careful to not damage the seal or sealing surfaces and make sure to securely tighten all fasteners or latches.

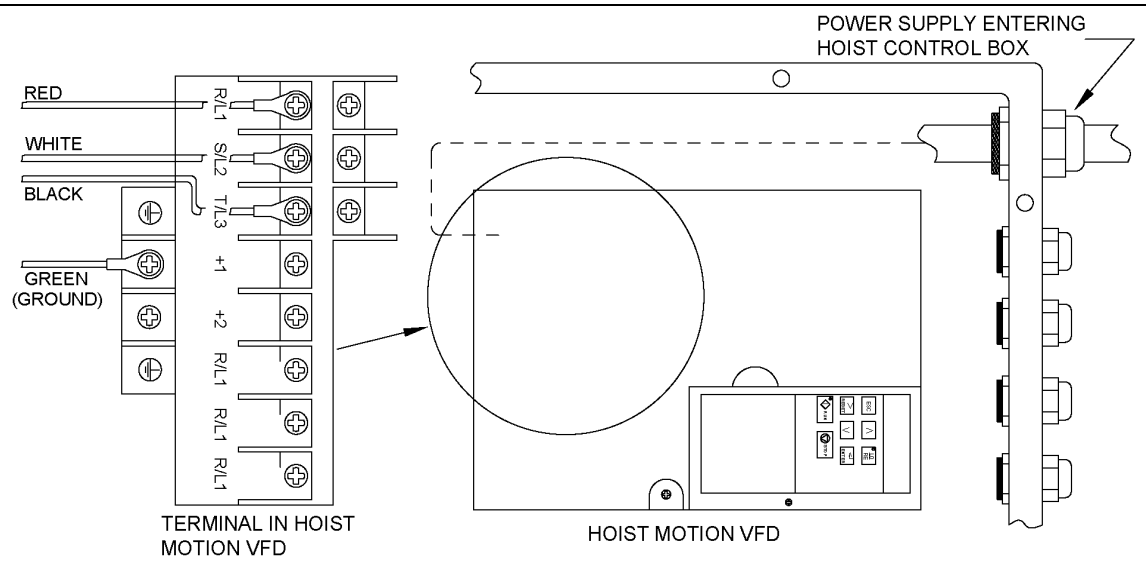

Figure 3-12 Power Supply Connection Points

3.7 Pendant Installation

WARNING If Trolley hoist was supplied without a Pendant/Control Cable. The installer must use a UL List Pendant along with a UL Listed Pendant Cord/Control Cable Type SO, SOO, SOOW, ST, STO, STOO or of a type at least equally servicable for the particular application and suitable for use with a Pendant rated 60ºC minumum, 600V, 18 ga. minimum. Always consult with a qualified person when appropriate Pendant Cable sizing is in question.

CAUTION In outdoor, damp or applications subject to moisture, a NEMA 4 rated pendant shall be used.

1) Refer to **Figure 3-13**, **Figure 3-14** and the hoist wiring diagram for pendant connections.

2) Remove Control Cover.

3) Loosen the cable fitting located on the lower side of the electrical enclosure and insert the Pendant Cable. Pull through enough cable to reach the terminals then securely tighten the cable fitting.

4) Attach a strain relief cable or chain between the pendant and hoist. The cable should attach to the small plate located at the bottom of the electrical enclosure under the gear box.

5) Access to terminal strip: The terminal block/strip is mounted to the left of the VFD in the control box, as shown in **Figure 3-13**.

6) Connect the individual pendant leads to the correct terminals as shown in **Figure 3-14**. Make sure the terminals are securely tightened and each lead is completely isolated.

7) Reinstall the Control Cover. Be careful to not to pinch any wires while closing and tightening down the Control Cover.

8) Attach the pendant strain relief to the attachment point shown in **Figure 3-15**.

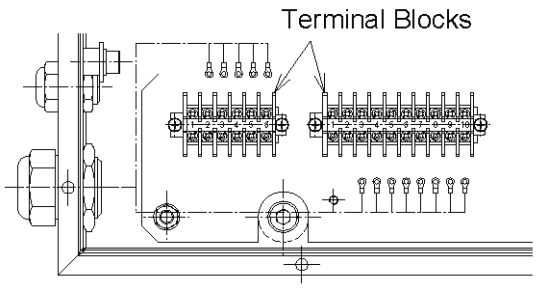

Figure 3-13 Pendant Terminal Block Location

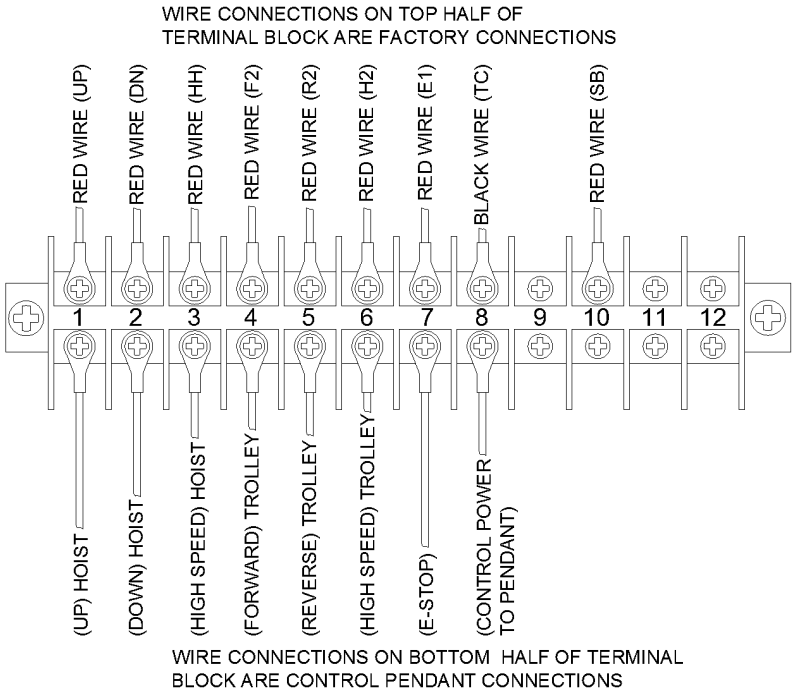

Figure 3-14 Pendant Terminal Connection

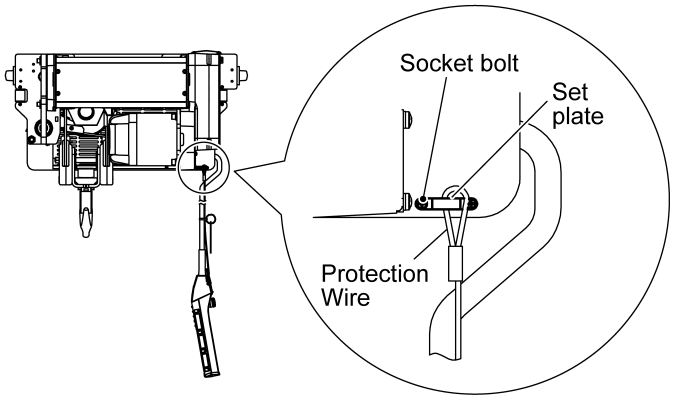

Figure 3-15 Pendant Strain Relief Attachment

3.8 Hoist Variable Frequency Drive (VFD) Setup

The hoist Lifting/Lowering VFD is located in the Trolley Hoist Control Box as shown in **Figure 3-16**.

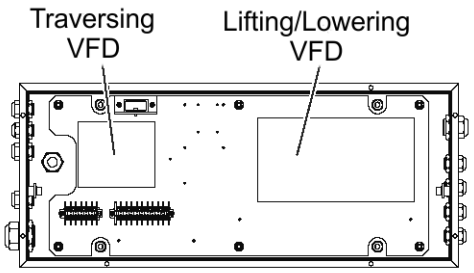

Control Box (Cover Removed)

Figure 3-16 VFD Locations

3.8.1 **⚠ DANGER** To avoid a shock hazard, **DO NOT** perform **ANY** mechanical or electrical maintenance on the dual speed (VFD control) trolley or hoist within 5 minutes of de-energizing (disconnecting) the trolley or hoist. This time allows the internal VFD capacitor to safely discharge.

3.8.2 **⚠ WARNING** **Do NOT** remove power to the VFD control hoist or trolley during operation.

3.8.3 **NOTICE** Ensure proper Electro-Static Discharge (ESD) component safe handling procedures before working on the VFD.

3.8.4 All hoists are equipped with a VFD. The VFD is used to control the high and low lifting speeds. The speeds come preset from the factory (**Table 3-5**). Speed (frequency) can be customized. Refer to **Section 3.8.13** for hoist specific speed ranges and instructions.

3.8.5 **⚠ DANGER** Parameter change and maintenance must be performed by a competent person with experience and expertise of handling the wire rope hoist and the VFD control.

3.8.6 **⚠ DANGER** The product is energized during a parameter change or maintenance of the VFD. **Do NOT** remove the cover of the VFD. **Do NOT** touch the circuit board or electrical components around the VFD.

3.8.7 The VFD is controled by a Keypad/Display Interface. Refer to **Figure 3-17** for Keypad/Display Interface functions and descriptions.

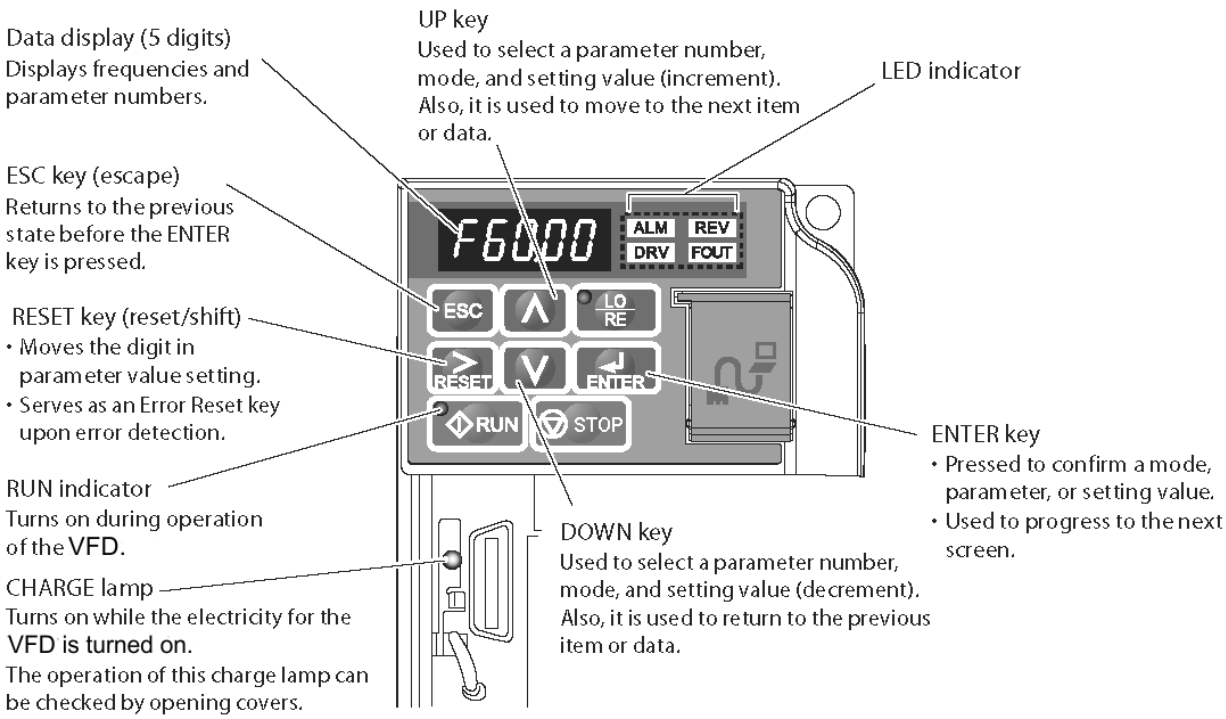

Figure 3-17 VFD Keypad/Display Interface

3.8.8 When power is supplied to the hoist the VFD LED operator display will illuminate as shown **Table 3-1**.

Table 3-1 LED Operator Display

No	Name	Description
Normal	F00.00 ALM REV DRV FOUT	The frequency command monitor is displayed in the data display part. DRV illuminates.
Error	Uu1 ALM REV DRV FOUT Example: Main circuit low voltage	The display varies depending on the error. ALM and DRV illuminate.

3.8.9 During operation the data display will exhibit illuminating or blinking data as shown in **Figure 3-18**.

Lighting	Blinking
A2-01	A2-01

Figure 3-18 Illuminating/Blinking Display

3.8.10 The digital display uses a seven segment character to form the specific charaters used in the display. **Table 3-2** shows the corresponding digital characters to its English eqivalent.

Table 3-2 Digital Character Key

Character	LED display	Character	LED display	Character	LED display	Character	LED display
0	0	9	9	I	ı	R	r
1	1	A	A	J	J	S	S
2	2	B	b	K	k	T	t
3	3	C	C	L	L	U	U
4	4	D	d	M	m*	V	v
5	5	E	E	N	n	W	vv*
6	6	F	F	O	o	X	No display
7	7	G	G	P	P	Y	y
8	8	H	H	Q	q	Z	No display

* Displayed using 2 digits.

3.8.11 The LED Lamp display provides hoist status. **Table 3-3** shows some of the status displays.

Table 3-3 LED Lamp Display

Lamp	Illuminating	Blinking	Off
ALM	Upon error detection	• Upon detection of minor failure • Upon detection of an OPE (operation error)	Normal
REV	Inputting a reverse rotation command	–	Inputting a forward rotation command
DRV	In the drive mode	–	In the program mode
FOUT	Displaying output frequency (Hz)	–	–
Description in this document	F 0.00 ALM REV DRV OUT	Er-03 ALM REV DRV FOUT	F 0.00 ALM REV DRV OUT

3.8.12 The Run Lamp display provides hoist “RUN” status. **Table 3-4** shows the various “RUN” displays.

Table 3-4 Run Lamp

Lamp	Illuminating	Blinking	Short blinking	Off
RUN	During operation	• During deceleration/ stop • Inputting a driving command with the frequency command 0	• During deceleration due to an emergency stop • During deceleration • During a stop due to driving interlock operation	During a stop
Description in this document	RUN	RUN	RUN	RUN

3.8.13 All of the hoists have speed/frequency ranges that can be customized to a specific application. Refer to **Table 3-5** for specific hoist speed/frequency ranges. To set custom speeds for an application, follow the procedure listed in **Table 3-6** and refer to the speed/frequency **Table 3-7**.

Table 3-5 Hoist Speed and VFD Frequency Ranges
200V = 208 – 230V / 400V = 415 – 460V

Product Code	Lifting Speed[1] (ft/min)			VFD Frequency[1] (Hz)			
	Low	High	No Load High Speed[2]	Low (d1-01)		High (d1-02)	
				200V	400V	200V	400V
RY030	4.3	26	39	8.5	8.6	57.7	56.5
RY050	4.3	26	39	8.3	8.4	56.5	57.5

1) The factory standard minimum and maximum speed/frequency range (6:1 ratio).
2) The “Light-Load High Speed” feature is not an adjustable parameter. It can be turned on/off using the instructions in **Table 3-8.**

Table 3-6 Hoist VFD Speed/Frequency Change Procedure	
⚠ CAUTION ▪ Each dual speed hoist model has a range of available speeds/frequencies (upper and lower limits). Any value outside the range listed in **Table 3-5** for your specific hoist is strictly prohibited. ▪ Speeds must be set such as Low [d1-01] and High [d1-02]. ▪ After parameters are changed, a “no load” operational check must be performed.	
Operational Step	**VFD Display**
1. Energize the hoist.	F 0.00 ALM REV DRV OUT
2. Press ∧ until the “Setup Mode” screen is displayed (blinking).	SFUP
3. Press ENTER to display the parameter setting screen (blinking).	d1-01
4. Press ∧ or ∨ until the desired parameter is displayed (blinking). (Low Speed: d1-01, High Speed: d1-02)	d1-01
5. When you press ENTER, the current setting value is displayed (digit selected blinks). (Example Value: 9 Hz)	009.00
6. Press RESET to move the blinking digit to the desired digit. (Example Value: 9 blinks)	009.00
7. Press ∧ or ∨ until the desired setting is displayed and press ENTER. (Example Value: 8 Hz)	008.00
8. Press ENTER to confirm the new setting.	End
9. The display will automatically return to the parameter screen (blinking). (As in Step 4.)	d1-01
10. Press ESC until the diplay returns to the initial screen. (As in Step 1.)	F 0.00 ALM REV DRV OUT

Table 3-7 Additional Speed Settings - Lifting				
Lifting Speed	**Frequency – Hz**			
ft/min	**3 Ton - 230V**	**3 Ton - 460V**	**5 Ton - 230V**	**5 Ton – 460V**
4.3 Factory Low Setting	8.5	8.6	8.3	8.4
4.5	9.0	9.1	8.8	8.9
5	10.1	10.2	9.9	10.0
5.5	11.3	11.3	11.0	11.2
6	12.4	12.4	12.1	12.3
6.5	13.5	13.5	13.2	13.4
7	14.6	14.6	14.3	14.5
7.5	15.7	15.7	15.4	15.6
8	16.9	16.8	16.5	16.7
8.5	18.0	17.9	17.6	17.9
9	19.1	18.9	18.7	19.0
9.5	20.2	20.0	19.8	20.1
10	21.3	21.1	20.9	21.2
10.5	22.5	22.2	22.0	22.3
11	23.6	23.3	23.1	23.4
11.5	24.7	24.4	24.2	24.6
12	25.8	25.5	25.3	25.7
12.5	26.9	26.6	26.4	26.8
13	28.0	27.7	27.5	27.9
13.5	29.2	28.8	28.5	29.0
14	30.3	29.8	29.6	30.1
14.5	31.4	30.9	30.7	31.3
15	32.5	32.0	31.8	32.4
15.5	33.6	33.1	32.9	33.5
16	34.8	34.2	34.0	34.6
16.5	35.9	35.3	35.1	35.7
17	37.0	36.4	36.2	36.8
17.5	38.1	37.5	37.3	38.0
18	39.2	38.6	38.4	39.1
18.5	40.4	39.6	39.5	40.2
19	41.5	40.7	40.6	41.3
19.5	42.6	41.8	41.7	42.4
20	43.7	42.9	42.8	43.5
20.5	44.8	44.0	43.9	44.7
21	46.0	45.1	45.0	45.8
21.5	47.1	46.2	46.1	46.9
22	48.2	47.3	47.2	48.0
22.5	49.3	48.4	48.3	49.1
23	50.4	49.5	49.4	50.2
23.5	51.6	50.5	50.5	51.4
24	52.7	51.6	51.6	52.5
24.5	53.8	52.7	52.7	53.6
25	54.9	53.8	53.8	54.7
25.5	56.0	54.9	54.9	55.8
26 Factory High Setting	57.7	56.5	56.5	57.5

3.8.14 “Hbb” will appear on the dual speed unit’s VFD display when the Emergency Stop Button is depressed. Turn the Emergency Stop Button clockwise to unlock the controls and allow hoist operation.

3.9 Light-Load High Speed Function

3.9.1 **NOTICE** All RY hoists come equipped with the “Light-Load High Speed Function”. At loads 25% or less than rated load, it allows the hoist to operate in the lifting and lowering direction 1.5 times faster than the standard high speed. This feature is turned on from the factory. To turn on/turn off the Light-Load High Speed Function refer to the procedure in **Table 3-8.**

Table 3-8 VFD “Light-Load High Speed Function” Turn On/Turn Off Procedure

NOTICE

- This feature is turned on from the factory.
- The “Light-Load High Speed Function” **must** be turned **off** during hoist load testing.
- At loads 25% (or less) of rated load, it allows the hoist to operate in the lifting and lowering direction 1.5 times faster than the standard high speed.
- To Turn On/Turn Off the Light-Load High Speed Function follow the procedure below.

Operational Step	VFD Display
1. Energize the hoist.	F 0.00 DRV
2. Press ∧ until the “Setup Mode” screen is displayed (blinking).	SETUP
3. Press ENTER to display the parameter setting screen (blinking).	
4. Press ∧ or ∨ until S1-01 for the Light-Load High Speed Function is displayed (blinking).	S1-01
5. When you press ENTER, the current setting value is displayed (digit selected blinks). (Example: ON:01 01 (default value) or OFF:00 00.	
6. When switching ON/OFF for theLight-Load high speed function, press ∨ and enter 01 when it is turned ON, or 00 when it is turned off.	01 or 00 ON OFF
7. After input, press ENTER to confirm.	
8. The screen returns to the parmeter setting screen automaiclly (Step S1-01).	S1-01
9. Press ESC until the diplay returns to the initial screen. (As in Step 1.)	F 0.00 DRV
10. This completes setting changes.	

3.10 Hoist Load Limiter (LL) Adjustment

The RY hoist is equipped with a load limiting device. The LL is adjusted from the factory to activate at 110% to 125% of the rated RY capacity.

Change the parameters of the VFD in the Control Box if the LL should be inactivated for the load test or changes and fine-tuning of the activation load are necessary.

NOTICE The "Light-Load High Speed Function" **MUST** be turned **OFF** during hoist load testing.

3.10.1 **⚠WARNING** When changing the parameters or performing maintenance for the VFD, make sure to read this manual and follow the instructions.

1) When changing parameters or performing maintenance for the VFD is needed, ensure that it is performed by a qualified person who has knowledge on structure and characteristics of the hoist and VFD, or contact a HHI Repair Service Center.

2) After operation, the Control Box may be hot to the touch. Be sure to wait approximately 30 minutes after the operation before performing maintenance in the Control Box.

3) Wait five minutes or more after shutting off the power before performing maintenance for peripheral devices other than the VFD.

4) Failure to comply with these instructions may lead to an electrical shock, burn, malfunction, failure, or damage to the VFD, and may cause serious accidents resulting in death or severe injury.

3.10.2 **⚠ DANGER** Change of parameters and maintenance of the VFD are performed with the power turned on. **Do NOT** remove the cover of the VFD or touch the circuit board and electrical component near the VFD.

1) The VFD is designed especially for the RY product. **Do NOT** use any VFD other than the OEM brand.

2) **Do NOT** modify the VFD.

3) **Do NOT** change the wiring.

4) **Do NOT** perform the Withstand Voltage test and Insulation Resistance measurement (megohmmeter) with the VFD connected.

5) **Do NOT** turn off the power during operation.

6) **Do NOT** connect the power supply to the output side of the VFD.

7) Failure to comply with these instructions may lead to an electrical shock, burn, malfunction, failure, or damage to the VFD, and may cause serious accidents resulting in death or severe injury.

3.10.3 For setting or monitoring parameters of the VFD, what are displayed on the LED operator and how to operate it will be described. The VFD is controled by a Keypad/Display Interface. Refer to **Figure 3-17** for Keypad/Display Interface functions and descriptions.

3.10.4 Follow the procedure described below to properly perform settings. The range of values (upper and lower limits) that can be set depends on the model. Values that are not included in this range cannot be registered.

Table 3-9 Load Limiter Setting Values

⚠ CAUTION

- Follow the procedure described below to properly perform settings. The range of values (upper and lower limits) that can be set depends on the model. Values that are not included in this range cannot be registered.

Operational Step	LED Display
1. Energize the hoist.	F 0.00 ALM DRV REV OUT Default Screen
2. Press ∧ until the "Setup Mode" screen is displayed (blinking).	SFUP
3. Press ENTER to display the parameter setting screen (blinking).	d1-01 Parameter Setting Screen
4. Press ∧ or ∨ until the desired parameter, Low Speed: S1-38 (shown at right, blinking) or High Speed: S1-41, is displayed). (*Be sure to set both the low- and high-speed parameters.)	S1-38
5. When you press ENTER, the initial setting value is displayed (digit selected blinks), as shown in the following **Table 3-10**.	112.0 The highest digit will blink.

Table 3-10 Default Setting Values

200V = 208 – 230V/400V = 415 – 460V

Capacity (T)	Product Code	Default Settings			
		200V		400V	
		S1-38	S1-41	S1-38	S1-41
		Low Speed	High Speed	Low Speed	High Speed
3	RYU030A	106	113	111	115
5	RYU050B	103	107	114	108

(*Be sure to reset the values to these default values after the load test is finished.)

6. Press RESET to move the blinking digit to the desired digit. (Example Value: 1 blinks)	112.0

7. Press ∧ or ∨ to register a value shown in **Table 3-11** so that the LL will not be activated even when a load that is 1.25 times heavier than the capacity is applied. If fine tuning is necessary, change the value to a desired one.

Table 3-11 Load Limiter Inactivation Setting Values
200V = 208 – 230V/400V = 415 – 460V

Capacity (T)	Product Code	LL Inactivation Settings			
		200V		400V	
		S1-38	S1-41	S1-38	S1-41
		Low Speed	High Speed	Low Speed	High Speed
3	RYU030A	156	163	161	165
5	RYU050B	153	157	164	158

8. Press ENTER to confirm the new setting.	End
9. The display will automatically return to the parameter setting screen (shown in the figure on the right, in the case of S1-38: low speed). Follow Step 4) and later to set S1-41 for the high-speed parameter.	S1-38
10. After setting both the low- and high-speed parmeters, press ESC until the diplay returns to the initial, default screen. (As in Step 1.)	F 0.00 ALM REV DRV OUT

- **<u>After the change is completed, be sure to perform the load test with the condition in which the LL will not be activated.</u>**
- **<u>Make sure to reset the activation parameter values to the default ones after the load test is finished.</u>**
- **<u>If the values are not reset, the LL will not be activated properly.</u>**

⚠WARNING THE LOAD LIMITER MUST BE SET TO FACTORY SPECIFICATIONS (Table 3-10) PRIOR TO THE HOIST BEING PLACED INTO SERVICE. FAILURE TO DO SO WILL PREVENT THE HOIST FROM FUNCTIONING PROPERLY IN THE EVENT OF AN OVERLOAD CONDITION.

3.11 Trolley Variable Frequency Drive (VFD) Setup

The trolley traversing VFD is located in the Trolley Hoist Control Box as shown in **Figure 3-19**.

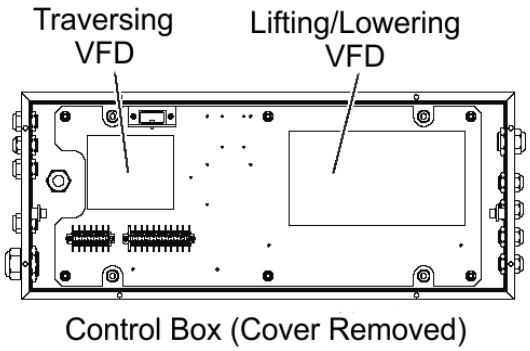

Figure 3-19 Trolley Hoist Control Box

3.11.1 **⚠ DANGER** To avoid a shock hazard, **DO NOT** perform **ANY** mechanical or electrical maintenance on the dual speed (or VFD control) trolley or hoist within 5 minutes of de-energizing (disconnecting) the trolley or hoist. This time allows the internal VFD capacitor to safely discharge.

3.11.2 **⚠ WARNING** Do Not remove power to the hoist or trolley during operation.

3.11.3 All trolleys are equiped with a VFD. The VFD is used to control the high and low speeds and the accelereations/decelerations (accel/decel) of the trolley. These speeds, 66/11 and acceleration/decelerations, 5.0 (RY030) and 6.0 (RY050) seconds come preset from the factory. Speed (frequency) and acceleration/deceleration time parameters can be customized. Refer to **Section 3.11.5** for trolley specific speed ranges and instructions and **Section 3.11.6** for trolley specific acceleration/deceleration parameters and instructions.

3.11.4 The VFD is controled by a Keypad/Display Interface. Refer to **Section 3.8.7** for Keypad/Display Interface functions and descriptions.

3.11.5 All of the trolleys have speed/frequency ranges that can be customized to a specific application. Refer to **Table 3-12** for specific trolley speed/frequency ranges. To set custom speeds for an application, follow the procedure in **Table 3-13** and refer to the speed/frequency **Table 3-14**.

Table 3-12 Trolley Speed and VFD Frequency Ranges
200V = 208 – 230V/400V = 415 – 460V

Product Code	Trolley Speed[1] (ft/min)		VFD Frequency[1] (Hz)			
	Low	High	Low (d1-01)		High (d1-02)	
			200V	400V	200V	400V
RY030	11	66	10.0	10.0	60.0	60.0
RY050	11	66	10.0	10.0	60.0	60.0

[1]The factory standard minimum and maximum speed/frequency range (6:1 ratio).

Table 3-13 Trolley VFD Speed/Frequency Change Procedure	
⚠ CAUTION ▪ Each dual speed trolley has a range of available speeds/frequencies (upper and lower limits). Any value outside the range listed in **Table 3-11** for your specific trolley is strictly prohibited. ▪ Speeds must be set such as Low [d1-01] and High [d1-02]. ▪ After parameters are changed, a “no load” operational check must be performed.	
Operational Step	**VFD Display**
1. Energize the trolley.	F 0.00 ALM REV DRV OUT
2. Press ∧ until the “Setup Mode” screen is displayed (blinking).	SrUP
3. Press ENTER to display the parameter setting screen (blinking).	d1-01
4. Press ∧ or ∨ until the desired parameter is displayed (blinking). (Low Speed: d1-01, High Speed: d1-02)	d1-01
5. When you press ENTER, the current setting value is displayed (digit selected blinks). (Example Value: 9Hz)	009.00
6. Press RESET to move the blinking digit to the desired digit. (Example Value: 9 blinks)	009.00
7. Press ∧ or ∨ until the desired setting is displayed and press ENTER. (Example Value: 8Hz)	008.00
8. Press ENTER to confirm the new setting.	End
9. The display will automatically return to the parameter screen (blinking). (As in Step 4.)	d1-01
10. Press ESC until the diplay returns to the initial screen. (As in Step 1.)	F 0.00 ALM REV DRV OUT

Table 3-14 Additional Speed Settings - Traversing	
Traversing Speed ft/min	**Frequency – Hz**
11 Factory Low Setting	10.0
12	11.0
13	11.9
14	12.8
15	13.7
16	14.6
17	15.6
18	16.5
19	17.4
20	18.3
25	22.9
30	27.4
35	32.0
40	36.6
45	41.1
50	45.7
55	50.3
60	54.9
66 Factory High Setting	60.0

3.11.6 All dual speed trolleys have a acceleration/deceleration time parameter range that can be customized to a specific application. Refer to **Table 3-15** for specific trolley acceleration/deceleration time ranges. To set custom acceleration/deceleration times for an application, follow the procedure in **Table 3-16**.

3.11.7 **WARNING** **Do NOT** set the deceleration/acceleration time to a value beyond the setting range in **Table 3-15**.

Table 3-15 Trolley VFD Acceleration/Deceleration Time Parameter Ranges						
Item	**Parameter No.**	**Product Code**	**Default Value**		**Changeable Range for Setting Value**	
			VFD Value (120Hz)	**Acceleration (sec)**	**VFD (sec)**	**Trolley (sec)**
Acceleration Time	C1-01 C1-03 C1-07	RY030	5.0	2.5	5.0 – 6.0	2.5 – 3.0
		RY050	6.0	3.0	Unchangeable	Unchangeable
Deceleration Time	C1-02 C1-04 C1-08	RY030	5.0	2.5	5.0 – 6.0	2.5 – 3.0
		RY050	6.0	3.0	Unchangeable	Unchangeable

Table 3-16 Trolley VFD Variable Parameter Setup Procedure

⚠ CAUTION

- Each dual speed trolley model has a range of available speeds/frequencies (upper and lower limits) and acceleration/deceleration time parameters.
- The VFD deceleration/acceleration time within the frequency range (0 to 120 Hz) is actually used by setting the deceleration/accelation time at 120 Hz.
- Example: the default setting for the RY030 trolley is set to 5.0 seconds for the accleration time of 0 to120 Hz, and 5.0 seconds fo rthe deceleration time, reference **Table 3-14**. During high speed operation, this becomes about 60 Hz, half of 120 Hz; therefore, decleration/accceleration time is 2.5 seconds each.
- Any value outside the range listed in **Table 3-13** for your specific trolley is strictly prohibited.
- Speeds must be set such as Low [d1-01] and High [d1-02].
- After parameters are changed, a “no load” operational check must be performed.

Operational Step	VFD Display
1. Energize the trolley.	F 0.00 ALM DRV REV OUT
2. Press ∧ until the “Setup Mode” screen is displayed (blinking).	SrUP
3. Press ENTER to display parameter setting screen.	d1-01 Parameter setting screen
4. Press ∧ or ∨ until “C1-01” is displayed (blinking).	C1-01
5. When you press ENTER, the current setting value is displayed.	0004.0 (The most significant digit blinks.) 4 seconds
6. Press RESET to move the blinking digit to the desired digit.	0004.0 ("4" blinks.)
7. Press ∨, and enter “0002.0”.	0002.0 2 seconds
8. Press ENTER to confirm.	End
9. The display automatically returns to the parameter setting screen (step 4).	C1-01
10. Press ESC until the display returns to the initial screen.	F 0.00 ALM DRV REV OUT

3.11.8 “Hbb” will appear on the dual speed unit’s VFD display when the Emergency Stop Button is depressed. Turn the Emergency Stop Button clockwise to unlock the controls and allow trolley operation.

3.12 Hoist Upper and Lower Limit Switch (ULLS) Setup

The Upper/Lower Limit Switch (ULLS) can automatically stop the Hook Block at preset locations (at two (2) upper-limit and lower-limit points) without requiring a positioning operation (such as “inching”) by the pendant.

3.12.1 Factory Settings

1) The factory set positions of the Upper/Lower Limit Switch are as shown **Table 3-17**.

2) After installing the trolley hoist, set and adjust the positions in accordance with the user’s conditions
i. of use as required.

3) THE LOWER LIMIT SWITCH <u>MUST</u> BE SET BEFORE TROLLEY HOIST OPERATION.

Table 3-17 Upper/Lower Limit Switch (ULLS) Factory Settings

Initial Setting Value		
Upper Limit Stop Position	Approx. 0.79 in. (20mm) below lever of BLS.	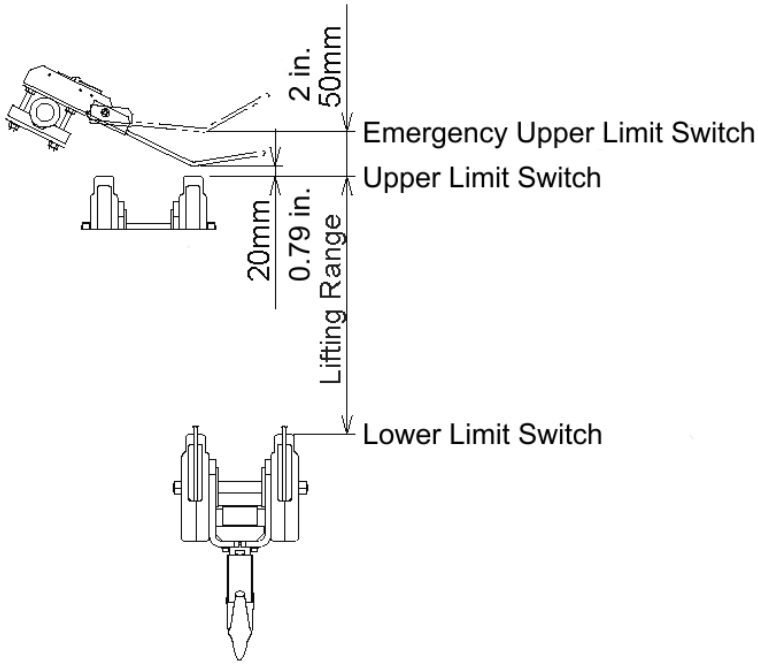
Lower Limit Stop Position	Below Upper Limit Switch Position by lifting range.	

Table 3-18 Setting the Upper and Lower Limit Switches
⚠ WARNING ▪ **Do NOT** adjust the BLS with wet hands. Failure to comply with this instruction can lead to electric shock, which may seriously affect the operator. ▪ **Do NOT** set the Upper Limit Switch of the Hook Block to a position higher than the lever of the BLS. ▪ **Do NOT** set the Lower Limit Switch of the Hook Block to a position below the lifting range of the hoist. ▪ Adjust the Lower Limit Switch of the Hook Block so that there are least three (3) wraps of the wire rope on the drum when adjusting for the lowest hook position. ▪ The Upper/Lower Limit Switch is used to limit the moving range of lifted load. Do not use the hoist in such a way that the Upper/Lower Limit Switch is always activated. ▪ The Upper/Lower Limit Switch may stop the Hook Block at locations shifted from the preset stop positions, due to difference in the weight of the lifted load or aging of the brake. Readjust the position regularly. ▪ **THE LOWER LIMIT SWITCH MUST BE SET BEFORE TROLLEY HOIST OPERATION.** Failure to comply with this instruction may not only result in failure to obtain normal function and performance of the hoist, but may also cause malfunction of the hoist and may lead to serious accidents.

3.12.1 Customer Settings

1) Referring to **Figure 3-20**, loosen the nut attached to the limit switch bolt, and adjust the position of the switch mounting brackets. * Moving the switch brackets by 11/32 inch (8.9 mm) (1 pitch of the Rope Drum) moves the Upper Limit Stop Position (or Lower Limit Stop Position) by 4 15/16 inch (125 mm) (1 role of the Rope Drum).

2) Adjust the upper and lower switch brackets with the following procedure.

3) Adjust the upper and lower switch brackets with the following procedure.

4) Upper side: Attach the bracket so that the distance from the end surface of the Back Frame and the left end surface of the switch bracket (1) can be not less than 2 13/16 inch (72 mm).

5) Lower side: Attach the bracket so that the distance from the end surface of the body and the right end surface of the switch bracket (2) can be not less than 5 1/32 inch (135 mm).

6) After moving the switch brackets (1) and (2), fasten the switch brackets securely with nuts (tightening torque: 23.6 lbf-ft/32 N•m).

7) **THE LOWER LIMIT SWITCH MUST BE SET BEFORE TROLLEY HOIST OPERATION.**

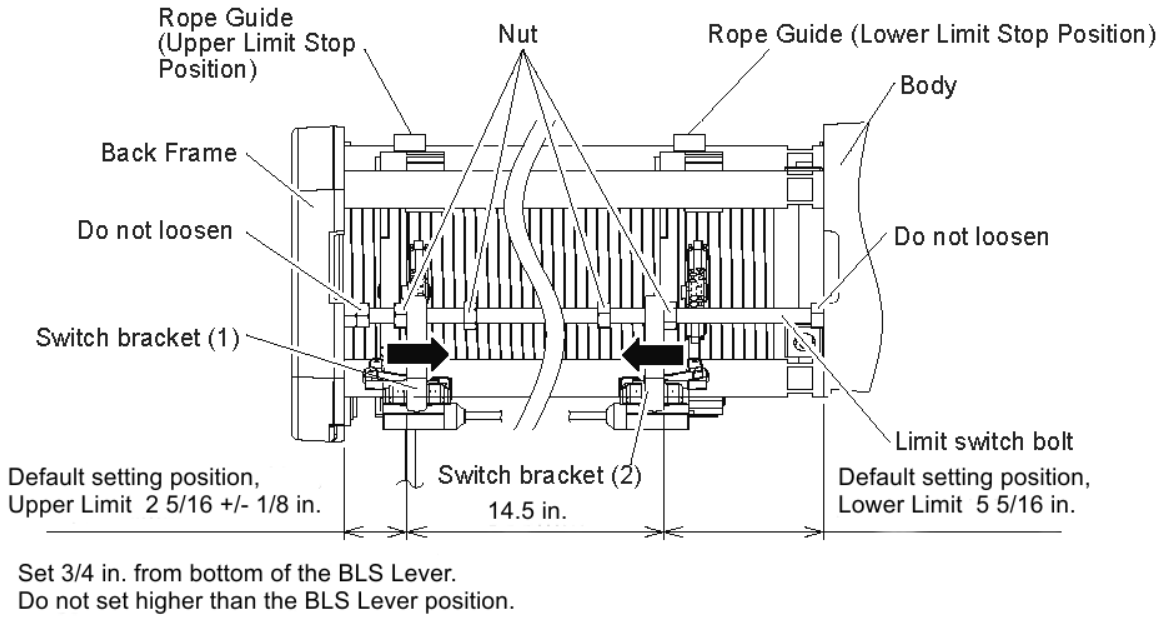

Figure 3-20 Hoist Upper and Lower Limit Switch (ULLS)

3.13 Pre-operational Checks and Trial Operation

3.13.1 Refer to the trolley hoist's nameplate and record the Product Code, and Serial Numbers in the space provided on the cover of this manual.

3.13.2 Perform pre-operational checks for the trolley hoist:

- **⚠WARNING** Confirm the adequacy of the rated capacity for all slings, chains, wire ropes and all other lifting attachments before use. Inspect all load suspension members for damage prior to use and replace or repair all damaged parts.
- **⚠WARNING** Verify and correct all Wire Rope irregularities prior to operating the hoist. Refer to **Section 3.3**.
- Measure and record the "k" dimension of the Bottom Hook on the hoist. See **Table 5-6** under **Section 5**.
- Ensure that trolley is properly installed on the beam, and stops for the trolley are correctly positioned and securely installed on the beam.
- Ensure that all nuts, bolts and split pins (cotter pins) are sufficiently fastened.
- Pull down on the Pendant and ensure that the Strain Relief Cable takes the force, not the Pendant Cord.
- **⚠ CAUTION** Check supply voltage before everyday use. If the voltage varies more than 10% of the rated value, electrical devices may not function normally.

3.13.3 Confirm proper operation:

- Before operating read and become familiar with **Section 4** – Operation.
- Before operating ensure that the hoist (and trolley) meets the Inspection, Testing and Maintenance requirements of ANSI/ASME B30.16.
- Before operating ensure that nothing will interfere with the full range of the hoist's (and trolley's) operation.

3.13.4 Proceed with trial operation to confirm proper operation.

- Verify that the controls agree with the trolley hoist direction. Make sure that depression of the Up button lifts the Bottom Block and depression of the Down button lowers the Bottom Block. Operate the trolley hoist through its full range of motion. Make sure the trolley hoist runs smoothly and does not bind. Check the power supply and festoon system for proper operation
- **NOTICE** Ensure that Wire Rope is <u>not</u> allowed to go "slack".
- Perform inspections per **Section 5.3**, "Frequent Inspections".

4.0 Operation

4.1 Introduction

⚠ DANGER

DO NOT WALK UNDER A SUSPENDED LOAD

⚠ WARNING

HOIST OPERATORS SHALL BE REQUIRED TO READ THE OPERATION SECTION OF THIS MANUAL; THE WARNINGS CONTAINED IN THIS MANUAL, INSTRUCTION AND WARNING LABELS ON THE HOIST OR LIFTING SYSTEM, AND THE OPERATION SECTIONS OF ANSI/ASME B30.16 and ANSI/ASME B30.10. THE OPERATOR SHALL ALSO BE REQUIRED TO BE FAMILIAR WITH THE HOIST AND HOIST CONTROLS BEFORE BEING AUTHORIZED TO OPERATE THE HOIST OR LIFTING SYSTEM.

HOIST OPERATORS SHOULD BE TRAINED IN PROPER RIGGING PROCEDURES FOR THE ATTACHMENT OF LOADS TO THE HOIST HOOK.

HOIST OPERATORS SHOULD BE TRAINED TO BE AWARE OF POTENTIAL MALFUNCTIONS OF THE EQUIPMENT THAT REQUIRE ADJUSTMENT OR REPAIR, AND TO BE INSTRUCTED TO STOP OPERATION IF SUCH MALFUNCTIONS OCCUR, AND TO IMMEDIATELY ADVISE THEIR SUPERVISOR SO CORRECTIVE ACTION CAN BE TAKEN.

HOIST OPERATORS SHOULD HAVE NORMAL DEPTH PERCEPTION, FIELD OF VISION, REACTION TIME, MANUAL DEXTERITY, AND COORDINATION.

HOIST OPERATORS SHOULD **NOT** HAVE A HISTORY OF OR BE PRONE TO SEIZURES, LOSS OF PHYSICAL CONTROL, PHYSICAL DEFECTS, OR EMOTIONAL INSTABILITY THAT COULD RESULT IN ACTIONS OF THE OPERATOR BEING A HAZARD TO THE OPERATOR OR TO OTHERS.

HOIST OPERATORS SHOULD **NOT** OPERATE A HOIST OR LIFTING SYSTEM WHEN UNDER THE INFLUENCE OF ALCOHOL, DRUGS, OR MEDICATION.

OVERHEAD HOISTS ARE INTENDED ONLY FOR VERTICAL LIFTING SERVICE OF FREELY SUSPENDED UNGUIDED LOADS. DO **NOT** USE HOIST FOR LOADS THAT ARE NOT LIFTED VERTICALLY, LOADS THAT ARE NOT FREELY SUSPENDED, OR LOADS THAT ARE GUIDED.

NOTICE

- Read ANSI/ASME B30.16 and ANSI/ASME B30.10.
- Read the hoist manufacturer's Operating and Maintenance Instructions.
- Read all labels attached to equipment.

The operation of an overhead hoist involves more than activating the hoist's controls. Per the ANSI/ASME B30 standards, the use of an overhead hoist is subject to certain hazards that cannot be mitigated by engineered features, but only by the exercise of intelligence, care, common sense, and experience in anticipating the effects and results of activating the hoist's controls. Use this guidance in conjunction with other warnings, cautions, and notices in this manual to govern the operation and use of your overhead hoist.

4.2 Shall's and Shall Not's for Operation

⚠ WARNING

Improper operation of a hoist can create a potentially hazardous situation which, if not avoided, could result in death or serious injury, and substantial property damage. To avoid such a potentially hazardous situation, **THE OPERATOR SHALL:**

- **NOT** operate a damaged, malfunctioning or unusually performing hoist.
- **NOT** operate a hoist until you have thoroughly read and understood Manufacturer's Operating and Maintenance Instructions or Manuals.
- Be familiar with operating controls, procedures, and warnings.
- **NOT** operate a hoist that has been modified without the manufacturer's approval or without certification that it is in conformity with ANSI/ASME B30 volumes.
- **NOT** lift more than rated load for the hoist.
- **NOT** use hoist with twisted, kinked, damaged, or worn wire rope.
- **NOT** use the hoist to lift, support, or transport people.
- **NOT** lift loads over people.
- **NOT** operate a hoist unless all persons are and remain clear of the supported load.
- **NOT** operate unless load is centered under hoist.
- **NOT** attempt to lengthen the wire rope or repair damaged wire rope.
- Protect the hoist's wire rope from weld splatter or other damaging contaminants.
- **NOT** operate hoist when it is restricted from forming a straight line from hook to support in the direction of loading.
- **NOT** use hoist's wire rope as a sling or wrap load wire rope around load.
- **NOT** apply the load to the tip of the hook or to the hook latch.
- **NOT** apply load unless the wire rope is properly seated in its grooves.
- **NOT** apply load if bearing prevents equal loading on all load-supporting wire ropes.
- **NOT** operate beyond the limits of the load wire rope travel.
- **NOT** leave load supported by the hoist unattended unless specific precautions have been taken.
- **NOT** allow the load wire rope or hook to be used as an electrical or welding ground.
- **NOT** allow the load wire rope or hook to be touched by a live welding electrode.
- **NOT** remove or obscure the warnings on the hoist.
- **NOT** operate a hoist on which the safety placards or decals are missing or illegible
- **NOT** operate a hoist unless it has been securely attached to a suitable support.
- **NOT** operate a hoist unless load slings or other approved single attachments are properly sized, and seated in the hook saddle.
- **NOT** use the hoist in such a way that could result in shock or impact loads being applied to the hoist.
- Take up slack carefully – make sure load is balanced and load-holding action is secure before continuing.
- Shut down a hoist that malfunctions or performs unusually and report such malfunction.
- Make sure hoist limit switches function properly.
- Warn personnel before lifting or moving a load.
- Warn personnel of an approaching load.

⚠ CAUTION

Improper operation of a hoist can create a potentially hazardous situation which, if not avoided, could result in minor or moderate injury, or property damage. To avoid such a potentially hazardous situation, **THE OPERATOR SHALL:**

- Maintain a firm footing or be otherwise secured when operating the hoist.
- Check brake function by tensioning the hoist prior to each lift operation.
- Use hook latches. Latches are to retain slings, chains, etc. under slack conditions only.
- Make sure the hook latches are closed and not supporting any parts of the load.
- Make sure the load is free to move and will clear all obstructions.
- Avoid swinging the load or hook.
- Make sure hook travel is in the same direction as shown on controls.
- Inspect the hoist regularly, replace damaged or worn parts, and keep appropriate records of maintenance.
- Use the hoist manufacturer's recommended parts when repairing the unit.
- Lubricate load wire rope per hoist manufacturer's recommendations.
- **NOT** use the hoist load limiting or warning device to measure load.
- **NOT** use limit switches as routine operating stops. They are emergency devices only.
- **NOT** allow your attention to be diverted from operating the hoist.
- **NOT** allow the hoist to be subjected to sharp contact with other hoists, structures, or objects through misuse.
- **NOT** adjust or repair the hoist unless qualified to perform such adjustments or repairs.

4.3 Hoist and Trolley Controls

4.3.1 Emergency Stop Button – Press the Emergency Stop Button to perform an emergency stop and lock-out of hoist motion controls or to reset the VFD as shown in **Figure 4-1**. Turn the Emergency Stop Button clockwise to unlock the controls and allow hoist operation. “Hbb” will appear on the dual speed unit’s VFD display when the Emergency Stop Button is depressed.

4.3.2 Dual Speed Pendant Control – Pendant controls supplied with dual speed trolley hoists have two step control buttons. For low speed depress the button to the first step and for high speed depress the button fully to the second step. Use the Up button to raise the hoist's hook or the Down button to lower the hoist's hook as shown in **Figure 4-1**. Depress the Forward and Reverse buttons to move the trolley horizontally. To stop motion release the buttons.

4.3.3 **⚠ CAUTION** Make sure the hoist and/or trolley motor completely stops before reversing direction.

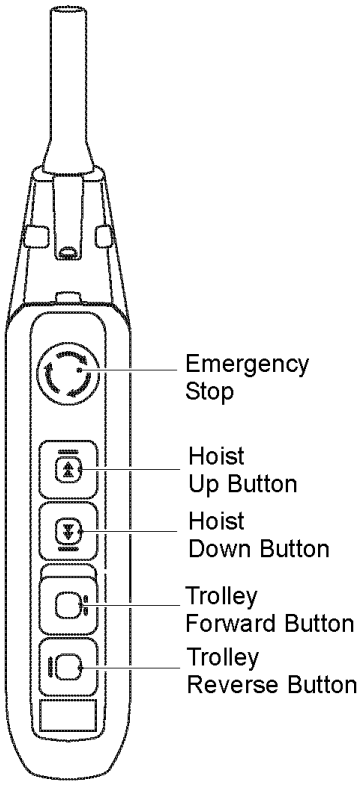

Figure 4-1 Push Button Pendant Control

5.0 Inspection

5.1 General

5.1.1 The inspection procedure herein is based on ANSI/ASME B30.16. The following definitions are from ANSI/ASME B30.16 and pertain to the inspection procedure below.

- **Designated Person** – a person selected or assigned by the employer or employer's representative as being competent to perform the specific duties.
- **Qualified Person** – a person who, by possession of a recognized degree in an applicable field, or certificate of professional standing, or who, by extensive knowledge, training, and experience, has successfully demonstrated the ability to solve or resolve problems relating to the subject matter and work.
- **Normal Service** – that distributed service, which involves operation with randomly distributed loads within the rated load limit, or uniform loads less than 65% of rated load for not more than 25% of the time.
- **Heavy Service** – that service, which involves operation within the rated load limit that exceeds normal service.
- **Severe Service** – that service which involves normal or heavy service with abnormal operating conditions.

5.2 Inspection Classification

5.2.1 The Initial Inspection –prior to initial use all new, re-installed, altered, or modified hoists/trolleys shall be inspected by a designated person to ensure compliance with the applicable provisions of this manual.

5.2.2 Inspection Classification – the inspection procedure for hoists/trolleys in regular service is divided into two general classifications based upon the intervals at which inspection should be performed. The intervals in turn are dependent upon the nature of the critical components of the hoists/trolleys and the degree of their exposure to wear, deterioration, or malfunction. The two general classifications are herein designated as FREQUENT and PERIODIC, with respective intervals between inspections as defined below.

5.2.3 FREQUENT Inspection – visual examinations by the operator or other designated personnel with intervals per the following criteria:

Table 5-1 Frequent Inspection Intervals

Service	Hoist and Trolley Interval	Rope Inspection Interval
Normal Service	Monthly	Start of Every Shift
Heavy Service	Weekly to Monthly	
Severe Service	Daily to Weekly	
Special or Infrequent Service	As recommended by a qualified person before and after each occurrence.	

5.2.4 PERIODIC Inspection – visual inspection by a designated person with intervals per the following criteria:

Table 5-2 Periodic Inspection Intervals		
Service	Hoist and Trolley Interval	Rope Inspection Interval
Normal Service	Yearly	1) At Least monthly (per OSHA), AND 2) Determined by a qualified person and based on such factors as expected rope life as determined by experience on the particular or similar installations; severity of environment; percentage of capacity lifts; frequency rates of operation; and exposure to shock loads. Inspections need not be at equal calendar intervals and should be more frequent as the rope approaches the end of its useful life. (per ANSI B30.16-2.4.1)
Heavy Service	Semiannually	
Severe Service	Quarterly	
Special or Infrequent Service	As recommended by a qualified person before the first such occurrence and as directed by the qualified person for any subsequent occurrences.	

5.3 Frequent Inspection

5.3.1 Inspections should be made on a FREQUENT basis in accordance with **Table 5-3**, "Frequent Inspection." Included in these FREQUENT Inspections are observations made during operation for any defects or damage that might appear between Periodic Inspections. A designated person shall evaluate and resolve the results of FREQUENT Inspections such that the hoist/trolley is maintained in safe working condition.

Table 5-3 Frequent Inspection
All functional operating mechanisms for maladjustment and unusual sounds.
Hoist and trolley in accordance with ANSI/ASME B30.16
Operation of all limit switches and associated components
Upper limit devices in accordance with ANSI/ASME B30.16
Hoist and trolley braking system for proper operation
Hook and hook latch in accordance with ANSI/ASME B30.10
Hook latch operation
Wire rope in accordance with **Section 5.7**
Wire rope reeving for compliance with **Section 3.3 and 6.8**
Proper function of pendant controls.

5.4 Periodic Inspection

5.4.1 Inspections should be made on a PERIODIC basis in accordance with **Table 5-4**, "Periodic Inspection." A designated person shall make evaluation and resolution of the results of PERIODIC Inspections such that the hoist is maintained in safe working condition.

5.4.2 For inspections where load suspension parts of the hoist/trolley are disassembled, a load test per ANSI/ASME B30.16 must be performed on the hoist/trolley after it is re-assembled and prior to its return to service.

Table 5-4 Periodic Inspection
Requirements of frequent inspection.
Evidence of loose bolts, nuts, or rivets.
Evidence of worn, corroded, cracked, or distorted parts such as suspension bolts, mounting eye bolts, stirrup bolts, stiffening plate bolts, gears, pins, bearings, pins, rollers.
Evidence of worn or damaged hook block, hook, clevises, yokes, shafts, wire rope and wire rope attachments.
Evidence of damage to hook retaining nuts or collars and pins, and welds or rivets used to secure the retaining members.
Evidence of worn or damaged rope-drum, rope guide and pulleys (sheaves).
End connections of wire rope.
Evidence of damage or excessive wear of load and idler sheaves.
Evidence of excessive wear on hoist or trolley motor parts.
Evidence of excessive wear on hoist or trolley brake system parts.
Evidence of excessive wear or damage to trolley wheels, gears and guide rollers.
Evidence of damage to supporting structure or trolley, if used.
Evidence of stress cracks on trolley stirrup plate welds.
Electrical apparatus for signs of pitting or any deterioration of visible controller contacts and electrical components, such as, switches, contacts and pushbuttons.
Proper function of motion limit devices that interrupt power or cause a warning to be activated.
Proper function of load limiter device.
Evidence of damage to all cables, including festooned cables.
Function labels on pendant control stations for legibility.
Function, instruction and warning labels properly attached to the hoist/trolley and legible (see **Section 1.2**).
Verify proper lubrication of gears, rope drum, rope guide, rope, sheaves and all other parts requiring lubrication.

5.5 Occasionally Used Hoists and Trolleys

5.5.1 Hoists that are used infrequently shall be inspected as follows prior to placing in service:

- Hoist Idle More Than 1 Month, Less Than 1 Year: Inspect per FREQUENT Inspection criteria in Section 5.3.
- Hoist Idle More Than 1 Year: Inspect per PERIODIC Inspection criteria in Section 5.4.

5.6 Inspection Records

5.6.1 Dated inspection reports and records should be maintained at time intervals corresponding to those that apply for the hoist's PERIODIC interval per **Section 5.2.4**. These records should be stored where they are available to personnel involved with the inspection, maintenance, or operation of the hoist/trolley.

5.6.2 A long-range rope inspection program should be established and should include records of examination of ropes removed from service so a relationship can be established between visual observation and actual condition of the rope.

5.7 Inspection Methods and Criteria

5.7.1 This section covers the inspection of specific items. The list of items in this section is based on those listed in ANSI/ASME B30.16 for the Frequent and Periodic Inspection. In accordance with ANSI/ASME B30.16, these inspections are not intended to involve disassembly of the hoist. Rather, disassembly for further inspection would be required if frequent or periodic inspection results so indicate. Such disassembly and further inspection should only be performed by a qualified person trained in the disassembly and re-assembly of the trolley hoist.

Table 5-5 Hoist and Trolley Inspection Methods and Criteria

Item	Method	Criteria	Action
Functional operating mechanisms.	Visual, Auditory	Mechanisms should be properly adjusted and should not produce unusual sounds when operated.	Repair or replace as required.
Limit Switch	Function	Proper operation. Actuation of limit switch should stop hoist.	Repair or replace as required.
Hoist Motor Brake	Measure, Visual	Motor brake gap should be adjusted to the distance shown in **Table 6-9** before measuring the brake wear. Brake lining dimension "A" should not be less than discard value listed in **Table 5-9.** Refer to **Section 6.4** for gaining access to motor brake and for adjustment and inspection procedures. Braking surfaces should be clean, free of grease/oil and should not be glazed.	Adjust, Repair or Replace as required.
Hook – Surface Condition	Visual	Should be free of significant rust; weld splatter, deep nicks, or gouges.	Replace.
Hook – Fretting wear	Measure	The abrasion of the "**u**" and "**t**" sections, must not exceed 10%. The "u" and "t" dimensions should not be less than discard value listed in **Table 5-6**	Replace.
Hook – Stretch	Measure	The "k" dimension should not be greater than 1.05 times that measured and recorded at the time of purchase (See **Section 3.13** and **Table 5-6**).	Replace.
Hook – Bent Shank or Neck	Visual	Shank and neck portions of hook should be free of deformations.	Replace.
Hook Block Assembly	Visual	Should be free of significant rust; weld splatter, nicks, gouges. Holes should not be elongated, fasteners should not be loose, and there should be no gap between mating parts.	Tighten or replace as required.

Table 5-5 Hoist and Trolley Inspection Methods and Criteria			
Item	**Method**	**Criteria**	**Action**
Hook Block – Swivel Bearing	Visual, Function	Bearing parts and surfaces should not show significant wear, and should be free of dirt, grime and deformations. Hook should rotate freely with no roughness.	Clean/lubricate, or replace as required.
Hook Block – Sheave(s) and Shaft	Visual, Function	Sheave(s) should be free of significant wear. Sheave surfaces should be free of nicks, gouges, dirt and grime. Bearing parts and surfaces of Sheave and Shaft should not show significant wear. Sheave should rotate freely with no roughness or significant free play.	Clean/lubricate, or replace as required.
Hook – Hook Latch	Visual, Function	Latch should not be deformed. Attachment of latch to hook should not be loose. Latch spring should not be missing and should not be weak. Latch movement should not be stiff – when depressed and released latch should snap smartly to its closed position.	Replace.
Hoist – Housing and Mechanical Components	Visual, Auditory, Vibration, Function	Hoist components including load blocks, suspension housing, wire rope attachments, clevises, yokes, suspension bolts, shafts, gears, bearings, pins and rollers should be free of cracks, distortion, significant wear and corrosion. Evidence of same can be detected visually or via detection of unusual sounds or vibration during operation.	Replace
Trolley – Housing and Mechanical Components	Visual, Auditory, Vibration, Function	Trolley components including load bars, trolley wheels, trolley wheel axles, eye bolts, hex shafts, gears, bearings, pins, rollers, and bumpers should be free of cracks, distortion, significant wear, and corrosion. Evidence of same can be detected visually or via detection of unusual sounds or vibration during operation.	Replace.
Bolts, Nuts and Rivets	Visual	Bolts, nuts and rivets should not be loose.	Tighten or replace as required.
Wire Rope Wedge	Visual	The fixing (anchorage with wedge) must be replaced if it shows deformation, wear, cuts, or necking.	Replace
Wire Rope Drum	Visual, Function	Entire surface of the drum should be coated with lubricant and should be free of dirt and grime. Rope should fit in drum grooves.	Clean/lubricate (see **Section 6.2**).
Wire Rope Guide	Visual, Function	Rope Guide should be free of significant wear, cracks, nicks, gouges, dirt and grime. Rope Guide should take up rope play and move with the rope on the drum during rope unwinding and winding.	Replace
Wire Rope – Reeving	Visual	The wire rope should be reeved properly through Hook Block Sheave (and Crossbar Sheave) – refer to **Section 6.6**.	Reeve/Install properly.

Table 5-5 Hoist and Trolley Inspection Methods and Criteria			
Item	**Method**	**Criteria**	**Action**
WARNING The full length of the Wire Rope must be inspected for rope diameter, broken strands or wires, and condition. The rope must be free of load for testing to detect any broken wires when bending the rope by hand (especially by radius of rope sheeve). Special care should be taken when inspecting sections of rapid deteriation, such as the following: ▪ sections in contact with saddles, equalizer sheaves, or other sheaves where the rope travel is limited; ▪ sections of the rope at or near terminal ends where corroded or broken wires may protrude; ▪ sections subject to reverse bends; ▪ sections of rope that are normally hidden during visual inspection, such as parts passing over sheaves. **WARNING** In certain applications (constant deadweight, recurrent stopping position, automatic operation, etc.) wire fractures may occur inside the rope without being visible from outside. Any condition that could degrade the strength and performance of the wire rope must be reported to a qualified person for evaluation and disposition.			
Wire Rope Diameter	Measure, Visual	Any reduction in the diameter of the wire rope must not be reduced due to corrosion, wear or core collapse more than the discard value in **Table 5-7**. The outer wires should not be worn more than 10% of their original diameter.	Replace. Inspect drum and all sheaves.
Wire Rope – Broken Wires or Strands	Visual	The wire rope should be inspected for broken wires or strands, paying close attention to end connection and sections that frequently pass over sheaves. The rope must NOT have: ▪ More than the Maximum number of broken wires listed in **Table 5-7**. ▪ More than 4 broken wires in 1 strand in one lay (one full revolution of a strand around the rope). ▪ Any broken strands.	Replace
Wire Rope – Condition	Visual	▪ Any wire rope deformation with permanent bends, flattening, unraveling, birdcaging, etc. ▪ General corrosion. ▪ Rope core exposure. ▪ One or more loose or protruding strands or wires from rope. ▪ Severely corroded or broken wires at end connections. ▪ Severely corroded, cracked, bent, worn or improperly applied end connections ▪ Any evidence of heat damage of any kind. (Wire rope exhibits any heat discoloration or localized loss of lubrication).	Replace

Table 5-5 Hoist and Trolley Inspection Methods and Criteria			
Item	**Method**	**Criteria**	**Action**
Wire Rope - Twisting	Visual	▪ Run the hoist into the highest and lowest hook positions without load. ▪ If any twisting is detected , untwist the rope immediately. See **Section 6.6** "Wire Rope Reeving and Anchorage"" ▪ Inspect the condition of the rope (especially near pulleys and rope anchorage. See **Table 5-7** "Wire Rope- Condition", "Wire Rope – Diameter", "Wire Rope-Broken Wires or Strands")	Replace as required.
Wire Rope - Lubrication	Visual	The wire rope must be maintained in a clean and well lubricated condition.	Clean/lubricate (see **Section 6.2**).
Trolley Side Plates	Visual	Must be free of significant deformation	Replace
Trolley Wheel – Condition	Visual	Trolley Wheel should be free of significant wear, cracks, nicks and gouges.	Replace.
Trolley Wheel – Tread	Visual, Measure	The diameter and width of the tread surface should not be less than the values listed in **Table 5-11**. The diameter should not be less than 10% of its original diameter as new.	Replace.
Trolley Wheel – Gear	Visual	Teeth should not be cracked, damaged, or excessively worn.	Replace.
Trolley Motor Brake	Visual	Braking action should not be overly abrupt and should not allow excessive drift. The Brake Disc wear "T" wear should not be less than maximum value listed in T**able 5-12.**	Replace.
Sheaves	Visual	Sheave should be free of significant wear. The wall thickness, "B", should not be less than the "B min" values in **Table 5-10**. The groove depth, "A", should not be greater than the "A Limit" value listed in **Table 5-10**. They should also be checked for easy running, indicating that the ball bearings are in good condition.	Replace.
Warning Labels	Visual	Warning Labels should be affixed to the hoist (see **Section 1.2**) and they should be legible.	Replace
Hoist Capacity Label	Visual	The label that indicates the capacity of the hoist should be legible and securely attached to the hoist.	Replace

Table 5-6 Bottom Hook Dimensions

"k" Measured When New:

_____

*These values are nominal since the dimension is not controlled to a tolerance. The "**k**" dimension should be measured with the hook is new- this becomes a reference measurement. Subsequent measurements are compared to this reference measurement in order to determine hook deformation/stretch. See **Table 5-5**, "Hooks-Stretch".

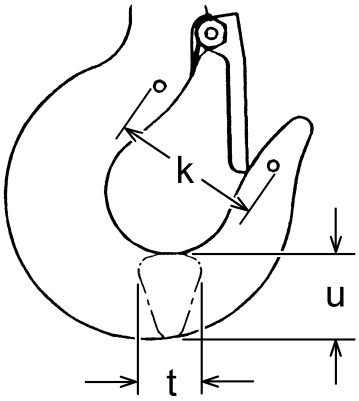

Hook Capacity Code	Nominal "k" Dimension* inch (mm)		(u) Dimension inch (mm)		(t) Dimension inch (mm)	
	Standard	Discard	Standard	Discard	Standard	Discard
RY030	3.54 (90)	3.72 (94.5)	2.28 (58)	2.06 (52.2)	1.77 (45)	1.59 (40.5)
RY050	4.13 (105)	4.34 (110.25)	2.64 (67)	2.37 (60.3)	2.09 (53)	1.88 (47.7)

Table 5-7 Wire Rope Wear Dimensions

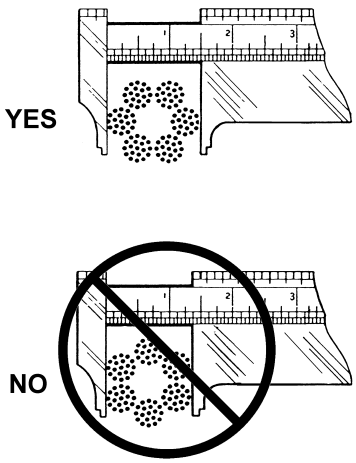

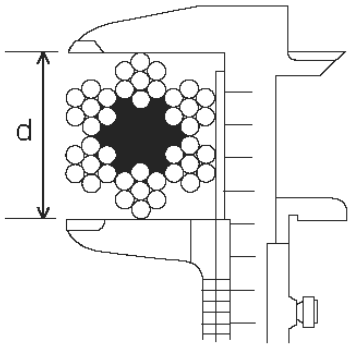

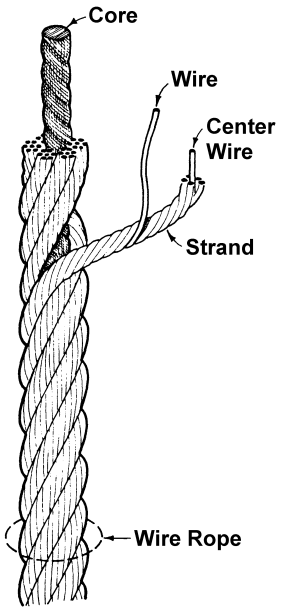

- The ratio of broken wires in a single strand must be less than 10%.
- Measure a part of the rope with significant abrasion and check that the diameter “d” is not reduced by 7% or more.
- **Table 5-8** exhibits various shapes that require the wire rope to be replaced.

Hoist Capacity (tons)	Rope Diameter (d)			Maximum Allowable Number of Broken Wires				
				Rope Diameter (mm)	For 6xDia. Length		For 30xDia. Length	
	Standard (mm)	Discard (mm)	Discard (in)		No. Broken Wires	Length in. (mm)	No. Broken Wires	Length in. (mm)
RY03U RY05U	9	8.37	0.33	9	13	2.13 (54)	26	10.63 (270)

Table 5-8 Various shapes that require the wire rope to be replaced.

Item	Check method	Criteria	When failed
Damage to the shape	Check visually.	• No apparent damage to the shape as shown below.	Replace the Wire Rope.

Wire getting out from the strands

Plus kink (the twist is partly tightened)

Core jutting out

Minus kink (the twist is partly loosened)

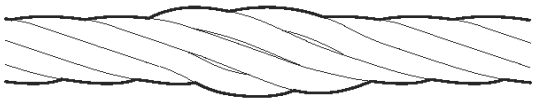

Partly reduced diameter of the strands

Waves (spiral-shaped)

Strand getting out from other strands

Basket shape (swollen in a basket shape)

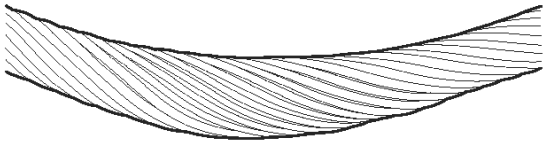

Flat rope (partly pressed to be flat)

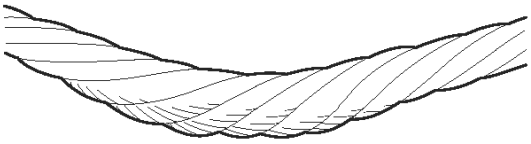

Table 5-9 Hoist Motor Brake

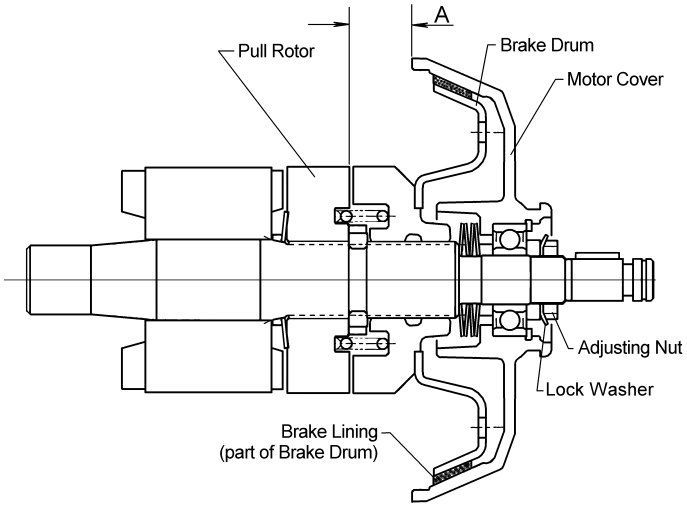

NOTICE Brake must be properly adjusted before measuring "A". See **Section 6.4**

Capacity Code	"A" Dimension – inch (mm)	
	Standard	Discard
RY030, RY050	0.82 (20.9)	0.76 (19.4)

Table 5-10 Rope Sheave Dimensions

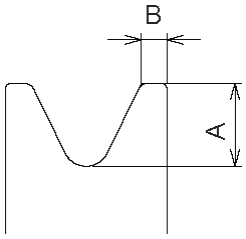

- The abrasion of the groove (A) must not exceed 15% of the wire rope diameter.
- The abrasion of the side wall (in thickness), (B) must not exceed 10% of the wire rope diameter.
- NO deficiencies that damage the wire rope
- No cracks

Hoist Capacity Code	Dimension A		Dimension B	
	Standard	Limit	Standard	Limit
RY030 RY050	0.59 (15)	0.64 (16.2)	0.18 (4.6)	0.15 (3.8)

Table 5-11 Wheel Dimensions

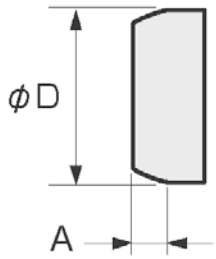

- The dimension “D” must not be reduced to below the limit value due to abrasion of the running surface.
- The difference (ellipticity) in the running surface diameter must not exceed 0.0394 in. (1mm).
- The dimension “A” indicates the position to measure the Dimension D.

Hoist Capacity Code	Nominal value		Limit for wear
	A in. (mm)	D in. (mm)	D in. (mm)
RY030 RY050	0.79 (20)	3.86 (98)	3.47 (88.2)

Table 5-12 Travel Motor Brake

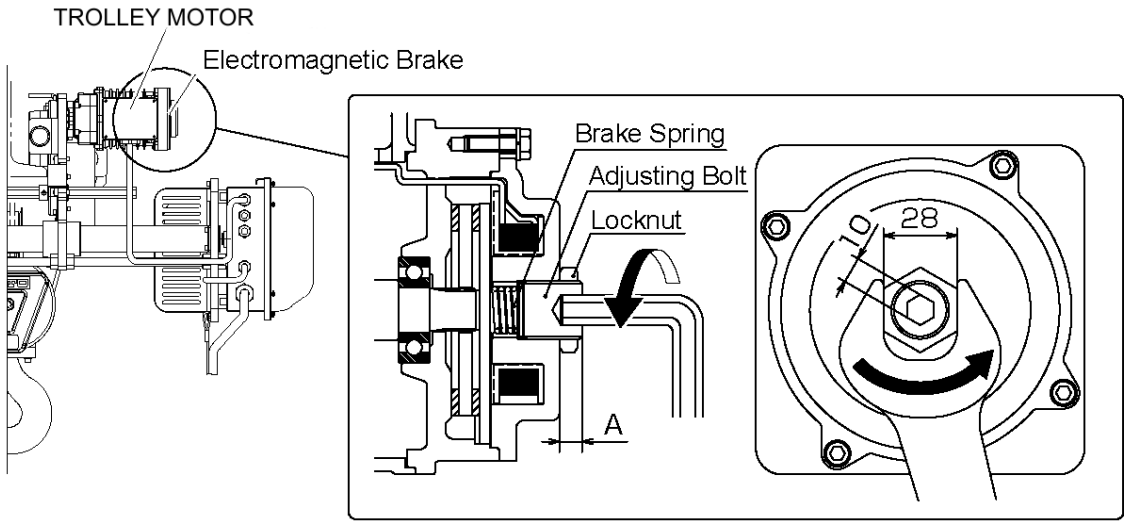

Brake Torque, Default Settings

Trolley Motor Output HP (kW)	Brake Torque, T (%)	Adjusting Bolt Height, A in. (mm)
0.34 (0.25)	40	0.47 (12)
0.54 (0.4)	30	0.43 (11)

Brake Dimensions

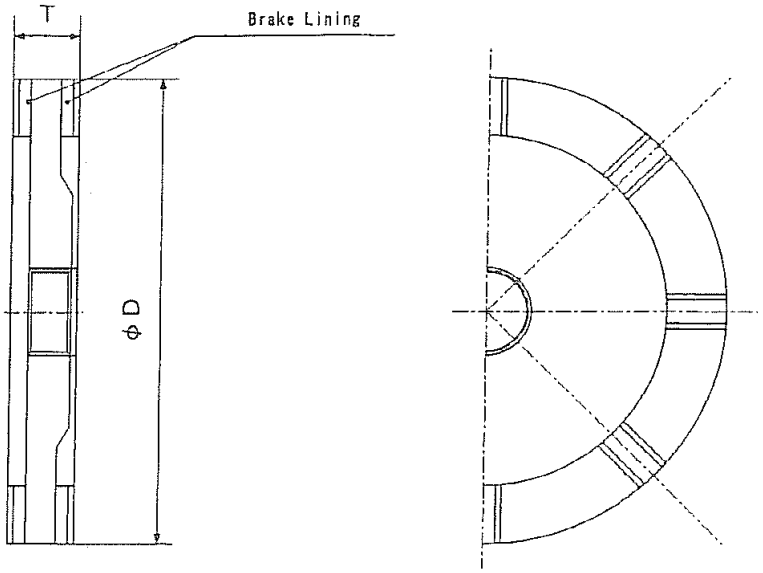

Product Code	Applicable Motor Output HP (kW)	ØD (in./mm)	T (in./mm)	
			Standard	Discard
RY030	0.33 (0.25)	3.15 (80)	0.43 (11)	0.35 (9)
RY050	0.5 (0.4)			

6.0 Maintenance and Handling

6.1 Count/Hour Meter

A count/hour function is included in all RY trolley hoists as one of the VFD parameters. Below are maintenance recommendations based on the number of starts and hours of operation accessed through the VFD.

6.1.1 Number of Starts/Hours of operation -. Refer to **Table 6-1** for parameter identification. Refer to **Table 6-2** for Count/Hour access procedure.

Table 6-1 VFD Count/Hour Parameter Identification

Parameter	Name	Discription
U7-01	Number of Starts (Higher Order)	The number of starts in the **up and down** direction x 1,000. Up to 10,000 units are displayed. Display of “1” = 1,000 starts. Display of “10,000” = 10,000,000 starts
U7-02	Number of Starts (Lower Order)	The number of starts in the **up and down** direction under 1,000 starts (1 to 999). One start will register a “1” in the display. When 1,000 starts are reached, the value of U7-01 is incremented by 1 and the value of U7-02 is reset to 0.
U7-03	Hours of Operation	The number of hours of operation in the **up and down** direction. One hour will register a “1” in the display. Up to 65535 hours are displayed.

The example using **Table 6-1**:

- U7-01 displays “81”, U7-02 displays “567”, U7-03 displays “122”
- Number of Starts = 81,567
- Number of Operated Hours = 122

Table 6-2 VFD Count/Hour Access Procedure

Operational Step	VFD Display
1. Energize the hoist.	
2. Press ∧ until the “Monitor” screen is displayed (blinking).	
3. Press ENTER to display the parameter setting screen an then press ESC to move from “01” to “U1”.	
4. Press ∧ or ∨ until the display reads “U7” (left value blinking).	
5. Press RESET and ∧ or ∨ to select the specific “Monitor” parameter (right vlaue blinking). (Example: U7-03 –Hours of Operation)	
6. Press ENTER to display the current parameter value. (Example: 75 Hours)	
7. Press ESC until the diplay returns to the initial screen. (As in Step 1.)	

6.1.2 Hoist Motor Gear Grease – The C/H Meter can be used in conjunction with the average load lifted by the hoist to estimate when the gear grease should be changed. Refer to **Table 6-3**.

Table 6-3 Criteria for Recommended Gear Grease Oil Replacement		
Loading During Normal Operation		**Change Gear Oil After: (hours)**
Rating	**Average % of Rated Capacity**	
Light	0 to 33%	360
Medium	33 to 67%	240
Heavy	67 to 100%	120

6.1.3 Hoist Motor Brake – The C/H Meter can be used to determine when the Hoist Motor Brake should be monitored or replaced. Refer to **Table 6-4**.

- When 1 Million starts have been achieved, inspect brake gap referring to **Table 6-4** criteria.
- When 2 Million starts have been achieved, replace brake drum, motor cover, brake spring and pull rotor regardless of brake gap.

Table 6-4 Criteria for Brake Replacement	
Condition of Electromagnetic Brake Gap (Ref. **Table 5-7** for Gap Wear Dimension)	**Action**
Brake gap is less than 50% of the limit.	Check the Brake at every 200,000 starts.
Brake gap reaches 50 to 100% of the limit.	Check the Brake at every 100,000 starts until the brake gap reaches at the limit gap.
Brake gap reaches the limit.	Replace the brake drum, motor cover, brake spring and pull rotor spring

6.1.4 Hook and Yoke – The C/H Meter can be used to determine when the Top/Bottom Hook and Yoke should be replaced. Refer to **Table 6-5**.

Table 6-5 Criteria for Top/Bottom Hook and Yoke Replacement	
Rate of Loading	**Number of Starts to replace Hook and Yoke**
Light - The hoist is mostly used with a light load. Rated capacity rarely applied.	Every 2 million starts.
Medium – The hoist is mostly used with a medium load. Rated capacity frequently applied.	Every 1.5 million starts.
Heavy – The hoist is mostly used with a heavy load. Rated capacity frequently applied.	Every 1 million starts.
Ultra-Heavy – Rated capacity constantly applied.	Every 1 million starts.

6.1.5 You are encouraged to use the Count/Hour Meter in conjunction with your experience with the hoist's application and usage to develop a history upon which to gage and fine tune your maintenance program for the hoist.

6.2 Lubrication

6.2.1 Wire Rope:

- For proper performance the Wire Rope must be maintained in a clean and well lubricated condition.
- The rope should be lubricated every 3 months (more frequently for heavier usage or severe conditions).
- To lubricate the rope, first remove any dirt, grime, moisture or other accumulations of contaminates. Then coat the Wire Rope with the grease specified in **Table 6-6**. Ensure that the lubricant is applied to the entire surface of the rope over its entire length, especially around the hook block sheave and at the rope guide. After grease application, repeatedly operate the lift and lower function of the hoist under no-load to evenly spread the grease throughout the length of the wire rope.
- For dusty environments, dry lubricants are suggested.
- For conditions not permitting lubricant to fall off the wire rope, consider using non-dripping lubricant.

6.2.2 Wire Rope Drum, Hook Block and Sheaves:

- The drum, hook block and sheaves should be lubricated every 3 months (more frequently for heavier usage or severe conditions).
- Lubricate the Drum, Hook Block and Sheaves with grease in **Table 6-6**.
- For dusty environments, dry lubricants are suggested.
- For conditions not permitting lubricant to fall off the drum, hook block and sheaves, consider using non-dripping lubricant.

6.2.3 Trolley Wheels and Gears:

- The Trolley Wheels and Gears should be lubricated every 3 months (more frequently for heavier usage or severe conditions).
- Lubricate the Trolley Wheels and Gears with grease in **Table 6-6**.
- For dusty environments, dry lubricants are suggested.
- For conditions not permitting lubricant to fall off the trolley wheels and gears, consider using non-dripping lubricant.

6.2.4 Hoist and Trolley Gearboxes – The hoist and trolley gearboxes are lubricated with grease and should not need any lubricant replacement.

- If necessary, replace according to **Table 6-7**.

Table 6-6 – Guidelines on Timing of Replacement or Application of Lubricants					
Part		**Lubricant Brand**	**Specified Quantity**		**Timings of Lubricant Replacement/Application (Hrs)**
			3 Ton	**5 Ton**	
Hoist Gear Box		Nippon Oil Epinoc AP (N) 0	2500g		1600
Trolley Gear Box		Nippon Oil, Epinoc AP (N) 2	60g	90g	800
Wheel Gear/Idle Gear			As Needed		800
Drum, Hook Block (inc. Sheave Bearing) and Sheaves					1600
Spline	Shaft Connector	Moly PS Grease No. 2 or equivalent (Molybdenum Disulfide No. 3)	As Needed		1600
	Gear Shaft		As Needed		1600
	Movable Core	Molybdenum Disulfide Lubricant Molytherm No. 2	As Needed		1 million times
Oil Seal (Lip)		Nippon Oil Epinoc AP (N) 2	As Needed		1600
Wire Rope		Mobilith SHC460	As Needed		As Needed

Table 6-7 Timing Guidelines for Select Wear Part Replacement		
Unit	**Part**	**Timing of Replacement (Hrs)**
Hoist	Reduction Gear Gear/Bearing	1600
	Motor Bearings	1600
	Motor Shaft	1600
	Brake Drum	1 million times
	Hook Bearing /Idle Sheave Assy	1600
Trolley	Reduction Gear Gear/Bearing	800
	Motor Bearings	800
	Motor Shaft	800
	Wheel A and B Assembly	800

6.3 Lubrication – Hoist Gearbox

6.3.1 **⚠WARNING** DO NOT use any grease or quantity other than that listed in **Table 6-6**. New trolley hoists are prefilled with the correct type and amount of grease. There is no need to check before installation, but if at any time the grease is found to be insufficient at an inspection, additional must be added at the Filler Opening, after removing the vent (air breather) as shown in **Figure 6-1 and Figure 6-2**.

6.3.2 **DETERMINING GREASE LIFE** – Refer to **Section 6.1.2** and **Table 6-7** when estimating gear grease life based on operations.

6.3.3 **GREASE LEVEL** – After removing the vent (Air Breather), grease should be seen in the Filler Opening.

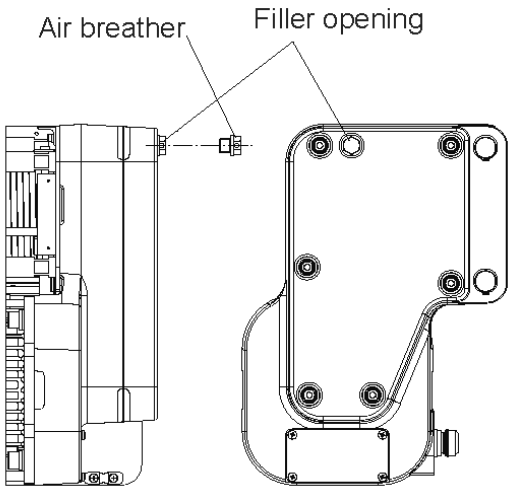

Figure 6-1 Breather and Filler Location

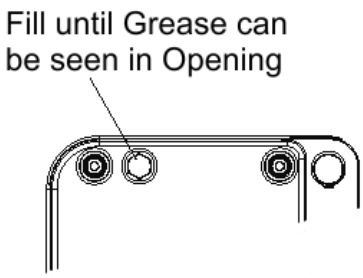

Figure 6-2 Grease Amount

6.3.4 **REPLACING GREASE** – Change gear grease at least once every 1600 hours of operation. The grease should be changed more frequently depending on the hoist's usage and operating environment. Refer to **Section 6.1.2**.

6.3.5 **REPLACING GREASE** – Change gear grease at least once every 1600 hours of operation. The grease should be changed more frequently depending on the hoist's usage and operating environment. Refer to **Section 6.1.2**.

6.3.6 **⚠WARNING** Using an incorrect type/grade of grease may affect the hoist operation. Refer to **Table 6-6** for the correct types/grade and amount of grease.

6.4 Hoist Motor Brake

6.4.1 To keep your hoist working in optimum condition and prevent possible down time, it is recommended to check your motor brake lining and adjustment at regular intervals.

6.4.2 **⚠ DANGER** Before proceeding, ensure that the electrical supply for the hoist or trolley has been de-energized (disconnected). Lock out and tag out in accordance with ANSI Z244.1 “Personnel Protection –Lockout/Tagout of Energy Sources”. The hoist must be unloaded and the bottom hook block set down.

6.4.3 Motor Brake Unit Removal - Adjustment and inspection of the motor brake requires removal of the motor brake unit from the hoist as an assembly. Refer to **Figure 6-6**.

1) Remove the four Fan Cover bolts (A), Fan Cover (B), Fan snap ring (C), and Fan washer (D).

2) Pull the Fan (E) off the motor shaft using a wheel puller if necessary.

3) Remove the four Motor Cover Assembly bolts (F) and carefully pull the motor brake unit (G) out of the hoist.

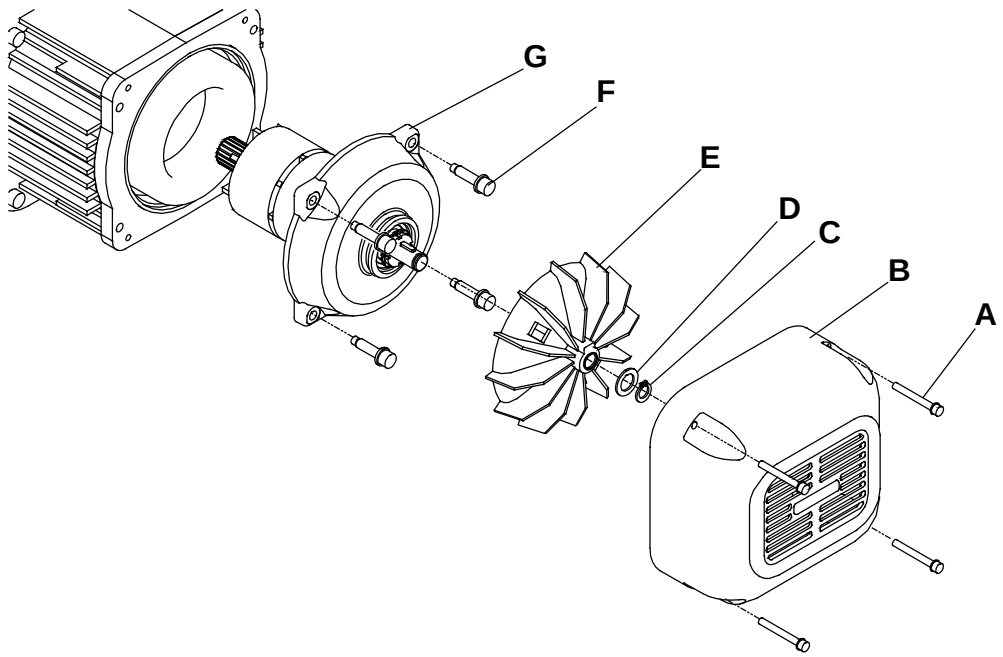

Figure 6-6 Motor Brake

6.4.4 Brake Gap (G) - The Brake Gap should be measured between the Brake Drum and Pull Rotor. Adjustment of the Brake Gap is accomplished by turning the Adjustment Nut in the center of the Motor Cover as shown in the figure with **Table 6-9**. Do this as follows:

1) Bend the tab of the Lock Washer away from the Adjusting Nut so that the Adjusting Nut can be rotated.

2) Using a spanner wrench and a feeler gauge, rotate the Adjusting Nut to attain the proper Brake Gap per **Table 6-9**.

3) After the Brake Gap is set, secure the Adjusting Nut by bending one of the tabs of the Lock Washer into a slot in the Adjusting Nut. If necessary rotate the Adjusting Nut clockwise (tightening) to line up the tab with the slot.

4) If the proper brake adjustment cannot be achieved, disassemble the motor brake and inspect all motor brake parts. Replace the Brake Drum and/or Motor Cover if necessary.

Table 6-9 Motor Brake Gap

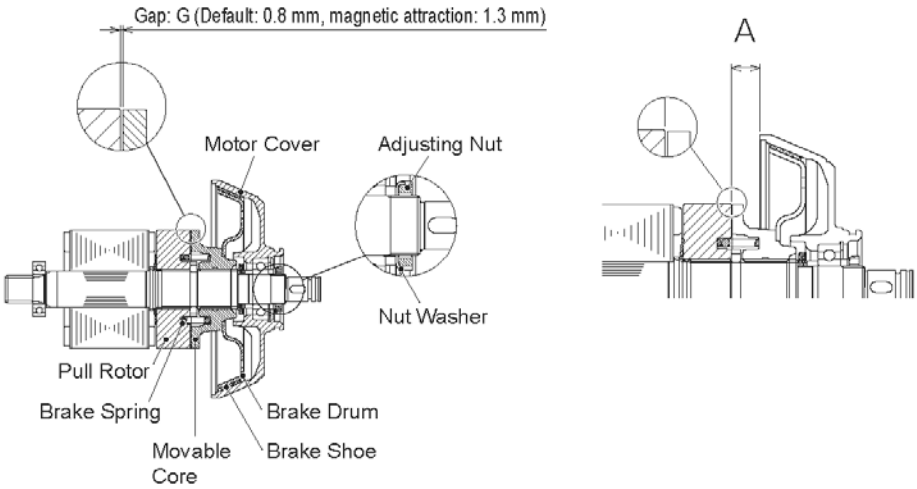

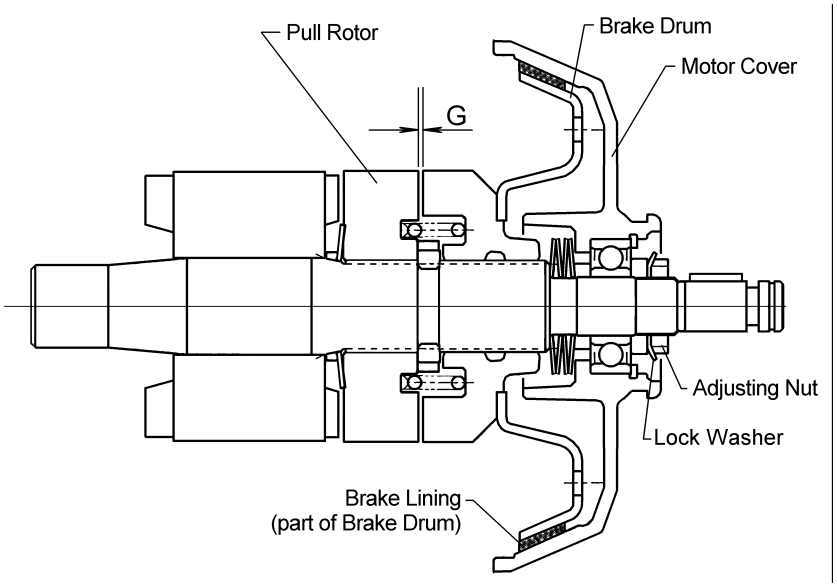

Capacity Code	Brake Gap (G) inch (mm)
RY030, RY050	0.032 (0.8)

6.4.5 Brake Lining Inspection –The brake lining is designed for a long life and should provide years of trouble-free service. If the brake lining is being inspected due to excessive load drift during operation (see **Section 5.7**), disassemble the motor brake and inspect all motor brake parts. Braking surfaces should be clean, free of grease/oil and should not be glazed. Replace the Brake Drum and/or Motor Cover if necessary. For normal inspections, the Brake Lining and Motor Cover wear should be measured as follows.

1) Adjust the Brake Gap per **Section 6.4.4** before measuring the Brake Lining and Motor Cover wear.

2) Measure the distance "A" using calipers and a straight edge. Place the straight edge across the edge of the motor cover and measure from the straight edge to the face of the Pull Rotor

3) Compare the measurement with the values listed in **Table 5-9**. Replace the Brake Drum and/or Motor Cover if the "A" measurement is smaller than the discard limit

6.4.6 Motor Brake Unit Installation - After the brake is properly adjusted and inspected, carefully replace the motor brake unit back into the hoist. Be sure to reseal the Motor Cover to motor frame surface using a small bead of liquid (hi-temperature) sealant. Refer to **Section 6.4.3** and reassemble the parts in reverse order of removal.

6.5 Trolley Motor Brake Adjustment

6.5.1 To keep your trolley working in optimum condition and prevent possible down time, it is recommended to check your motor brake at regular intervals. Intervals must be adapted in accordance with the application.

6.5.2 **⚠ DANGER** Before proceeding, ensure that the electrical supply for the hoist or trolley has been de-energized (disconnected). Lock out and tag out in accordance with ANSI Z244.1 “Personnel Protection –Lockout/Tagout of Energy Sources”.

6.5.3 **⚠ WARNING** Do **NOT** set the brake torque to a value beyond the setting range. Failure to comply with this instruction may cause a rapid stop or large slip, leading to serious accidents

6.5.4 Motor Brake Check - See **Figure 6-7**.

1) Move the trolley hoist into a safe position

2) The Trolley Motor Bake is factory set/adjusted for optimal brake force. The brake torque can be changed in accordance with brake wear. The brake torque can be changed by changing the projection amount (Dimension A) of the Adjusting Bolt on the back of the trolley motor. Using **Figure 6-7** and **Table 6-10** to adjust the trolley motor brake as needed.

3) Check that the locknut is not loose after changing or adjusting the brake torque. Failure to comply with this instruction may cause the hoist to overrun, leading to serious accidents.

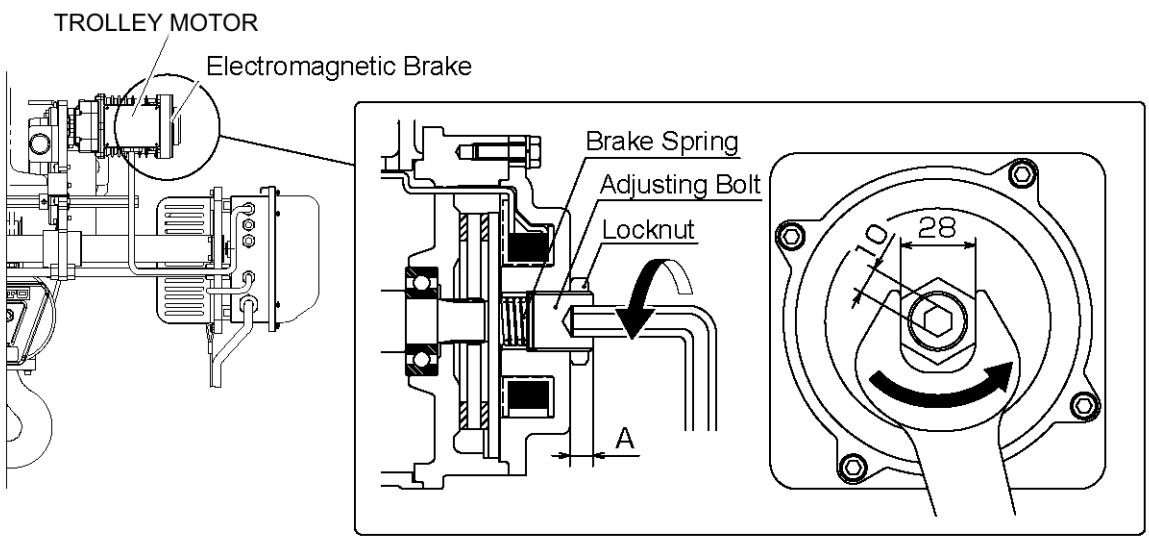

Figure 6-7 Trolley Motor Brake Adjustment

Table 6-10 Trolley Brake Torque Adjustment

1) Loosen the Locknut with a 28mm hex wrench.
2) Loosen the Adjusting Bolt with a 10mm hex drive. Determine the correct Adjusting Bolt height, Dimension A, using the Motor Brake tables on the right. Adjust the bolt height accordingly.
3) While holding the Adjusting Bolt, to prevent it from rotating, tighten the Locknut to lock the Adjusting Bolt.

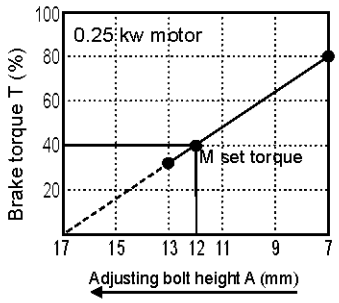

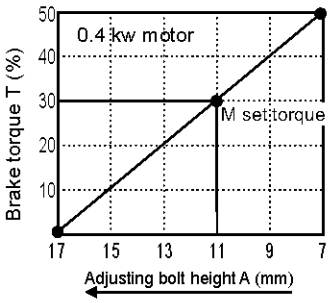

Brake Torque, Default Settings		
Trolley Motor Output HP (kW)	Brake Torque, T (%)	Adjusting Bolt Height, A in. (mm)
0.34 (0.25)	40	0.47 (12)
0.54 (0.4)	30	0.43 (11)

6.6 Wire Rope Reeving and Anchorage

6.6.1 Lubrication and Cleaning – Refer to Section 6-2.

6.6.2 **⚠WARNING** Be certain that the replacement Wire Rope is obtained from Harrington Hoists, Inc. and is the correct Wire Rope for the hoist. See the parts list or the Wire Rope factory certificate for the Wire Rope part number. If the Wire Rope is being replaced due to damage or wear out, destroy the old rope to prevent its reuse.

6.6.3 After commissioning a new wire rope hoist, or after replacing the Wire Rope, the Wire Rope of multi-fall hoists may twist. This can be seen from the bottom hook block turning, particularly when unloaded.

⚠WARNING Twisting in the Wire Rope affects safety and service life. Remove any twists!

6.6.4 Regularly inspect the Wire Rope for twisting and follow the procedure in **Section 6.6.6** "Wire Rope Installation/Rope Guide Installation and other corresponding Wire Rope sections.

6.6.5 Wire Rope Removal/Rope Guide Replacement

1) **⚠CAUTION** The hoist must be properly powered and operational in order to perform the following procedures.

2) **⚠CAUTION** When replacing Wire Rope, check for wear on mating parts, i.e. Drum, Sheaves, Hook Block Sheaves and replace if necessary.

3) Lower the Hook Block to the lowest possible position without touching the floor or ground.

4) Remove the Snap Ring (B) from the Rope Anchorage Shaft (C) supporting the Terminal (D) of the Rope Anchorage Assembly (A) as shown in **Figure 6-9**.

5) Pull the Rope Anchorage Shaft (C) out of the Rope Anchorage Assembly (A). Then pull the Terminal (D) out of the Rope Anchorage Assembly (A) as shown in **Figure 6-10.**

6) Remove the Wire Rope Clamp (E) from the Wire Rope (F) as shown in **Figure 6-11**.

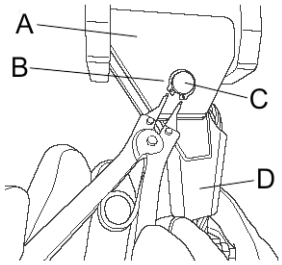

Figure 6-9

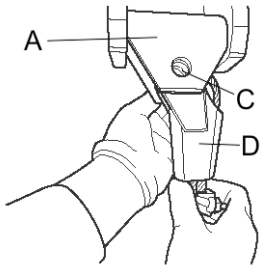

Figure 6-10

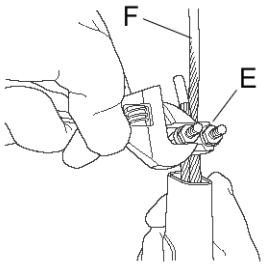

Figure 6-11

7) Pull the Terminal Wedge (G) out of the Terminal (D) as shown in **Figure 6-12**. If it is difficult to remove, use a screwdriver and small hammer to lightly tap it out of the Terminal (D) as shown in **Figure 6-13**.

8) Remove the Wire Rope from the Terminal as shown in **Figure 6-14**.

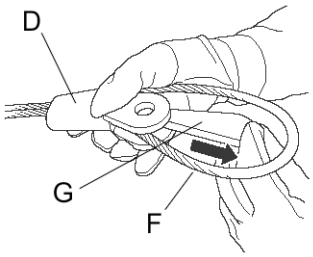

Figure 6-12

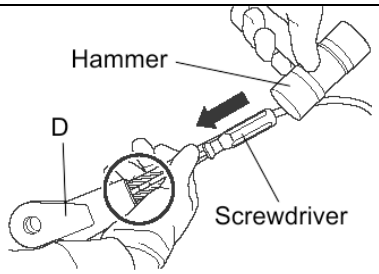

Figure 6-13

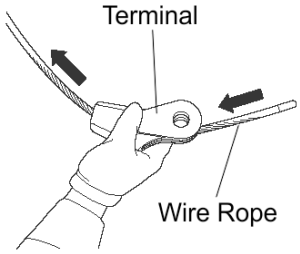

Figure 6-14

9) Slowly pull the Wire Rope out from the Bottom Hook Block Sheave and the Idle (return) Sheave on the hoist and then from the other Sheave of the Hook Block as shown in **Figures 6-15**, **6-16**, and **Figure 6-17**.

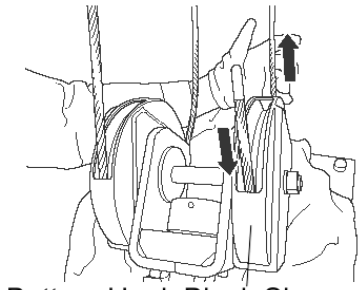

Figure 6-15

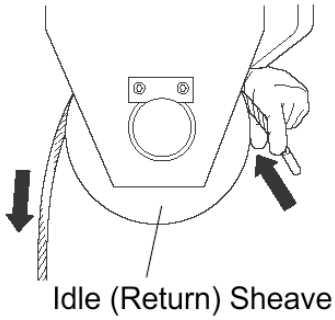

Figure 6-16

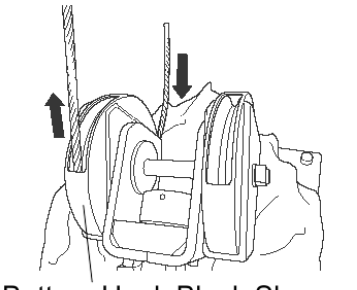

Figure 6-17

10) Remove both Socket Bolts holding Rope Guide B (part with the Support Shaft "guide") to Rope Guide A. Then move Rope Guide B away from Rope Guide A as shown in **Figure 6-18**.

11) Referencing **Figure 6-19**, loosen the other Socket Bolt indicated by the arrow and move Rope Guide A toward the Back Frame side to the position where the Rope Guide A Support Shaft Guide does not contact the Wire Rope.

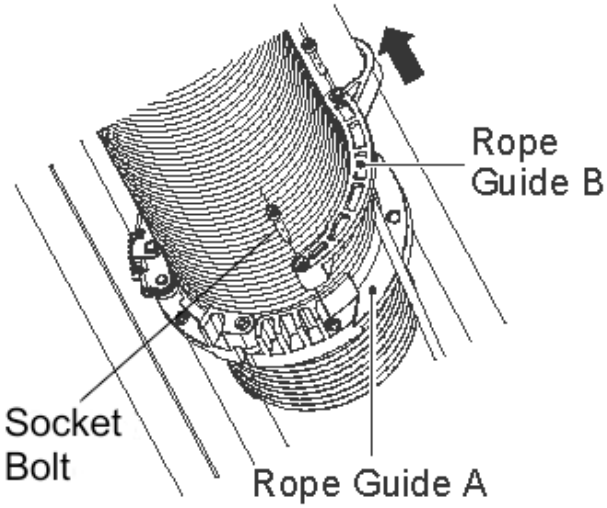

Figure 6-18

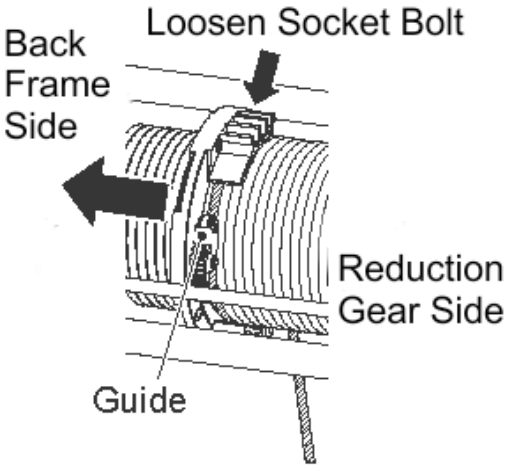

Figure 6-19

12) Move Rope Guide A to a position where it does not interfere with the Support Shaft by the procedure shown in **Figure 6-20**.

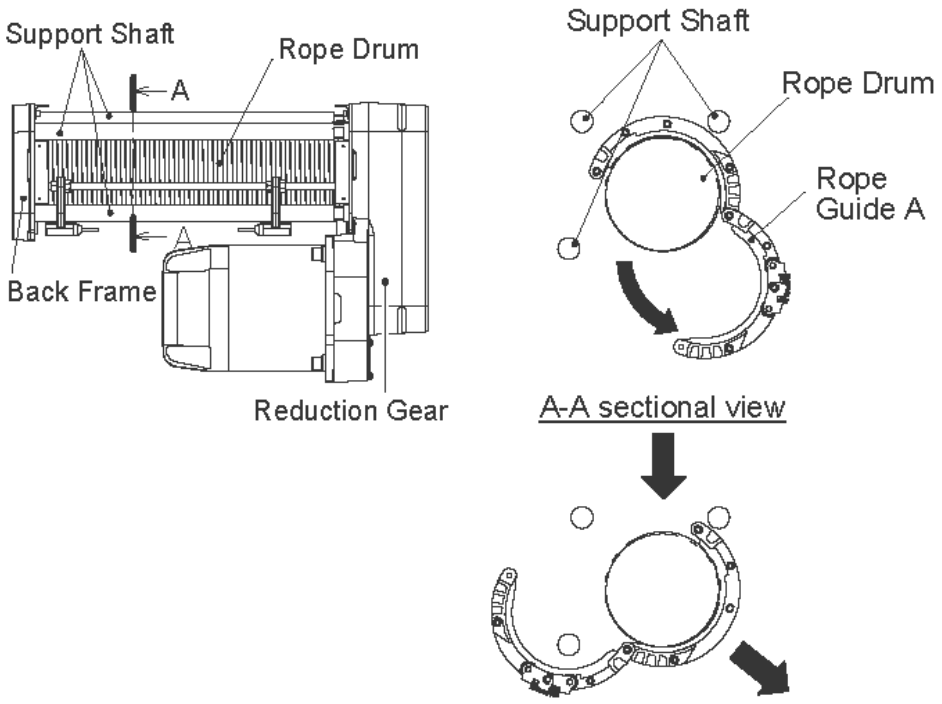

Figure 6-20

13) As shown in **Figure 6-21**, unreeve or remove the Wire Rope from the drum manually by carefully pulling the Wire Rope off the Drum. Continue to pull the Wire Rope until reaching the Wire Rope Clamps on the Drum.

14) While maintaining control of the Wire Rope, loosen and remove the Wire Rope Clamps holding the Wire Rope in the groove on the Drum as shown in **Figure 6-22**.

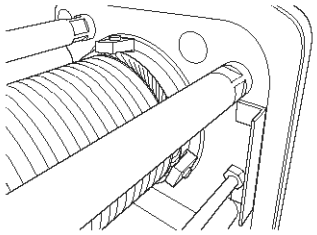

Figure 6-21

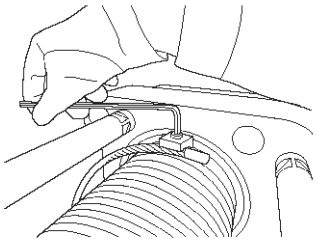

Figure 6-22

6.6.6 Wire Rope Installation/Rope Guide Installation

1) **⚠ CAUTION** The hoist must be properly powered and operational in order to perform the following procedures.

2) **⚠ CAUTION** When replacing Wire Rope, check for wear on mating parts, i.e. Drum, Sheaves, Hook Block Sheaves, and replace if necessary.

3) **⚠ WARNING** ALWAYS unwind the roll of the new Wire Rope without kinks or bends (see **Figure 6-23**). Protect the Wire Rope from dirt.

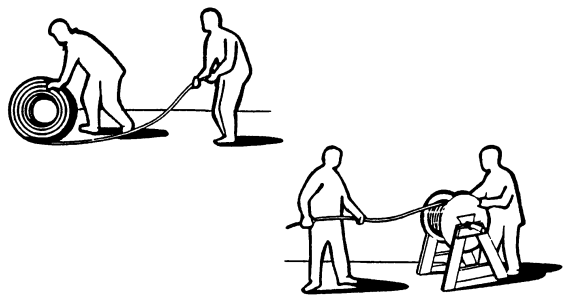

Figure 6-23

4) Examine the Wire Rope Guide and the Drum after cleaning/degreasing thoroughly.

5) Verify proper fit of the Wire Rope Guide parts with the Drum, matching up the respective grooves and check that there is no excessive clearance. Check for pointed or sharp crests and heavy wear and tear. Where necessary assess the need for replacing the Wire Rope Guide and the Drum.

6) Secure the end of the Wire Rope in the Drum "groove" with the first of three (3) Wire Rope Clamps and Socket Bolts. Fully tighten the Bolts to a torque value of approximately 160 lbf-inch (18 N*m). Allow the Wire Rope end, including the Wire Rope "Identification (ID) Tag", past the first Clamp for a minimum of approximately 3 times the wire rope diameter (ex. for 9mm rope, it would be 27mm, or approximately 1 1/16 inch), see **Figure 6-24**.

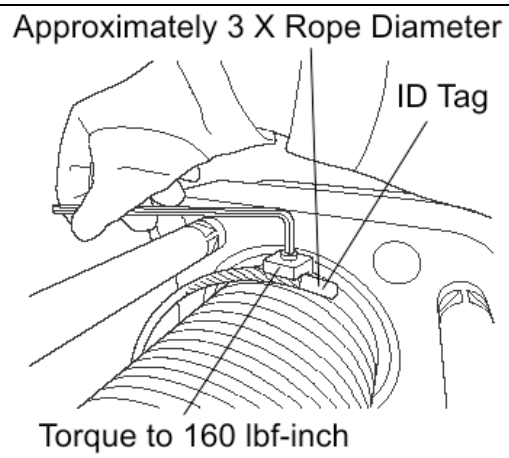

Figure 6-24

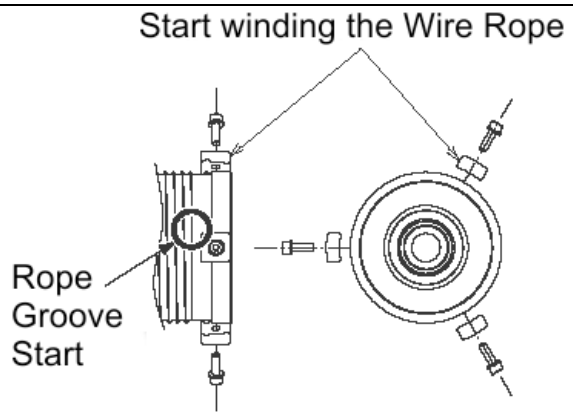

Figure 6-25

7) Press the “UP” button on the Pendant and slowly begin lifting, rotating the Drum and winding the Wire Rope tightly onto the Drum for about 120 degrees to the next Wire Rope Clamp location. While keeping the Wire Rope tightly on the Drum, install the second Wire Rope Clamp. Reference **Figures 6-25, 6-26** and **6-27**.

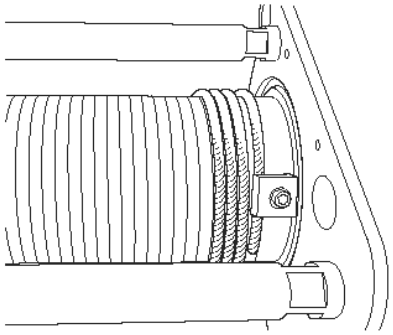

Figure 6-26

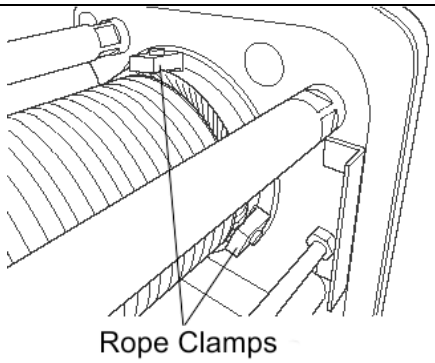

Figure 6-27

8) Continue winding the Wire Rope tightly onto the Drum until reaching and installing the third Wire Rope Clamp.

9) **⚠ CAUTION** Tension must be maintained on the Wire Rope throughout installing it onto the Drum. Otherwise, the Wire Rope will get “slack” and potentially unrolling off the Drum.

10) After fastening the Wire Rope to the Drum, press the “UP” button on the Pendant to wind the Wire Rope onto the Drum. Use protective gloves to keep the Wire Rope constantly taut and well placed in the Drum grooves, letting the Wire Rope wind around for at least 10 times. Let the Wire Rope run through a greased rag to both clean and ensure the Wire Rope is properly lubricated. See **Section 6.2** for grease type.

11) Without loosening the tension on the Wire Rope, clamp a weight onto the Wire Rope below the position of the Rope Guide, taking care not to damage the Wire Rope. Replacing the manual tension with the weight will prevent the Wire Rope from unrolling off the Drum.

12) After winding the Wire Rope around the Drum, attach the Rope Guide while paying attention to the position of the Rope Guide Collar when attaching the Rope Guide, see **Figure 6-28**.

13) Attach the Rope Guide to the Rope Drum in the way shown in **Figure 6-29**. Be sure to attach the Rope Guide so that the inner groove of the Rope Guide meshes with the Rope Drum.

14) When attaching the Rope Guide liberally apply grease (see **Section 6.2** for grease type) to the Roller part of the Rope Guide, the convex part engaged with the Rope Drum and the Rope Drum groove, reference **Figure 6-30** and **Figure 6-31**.

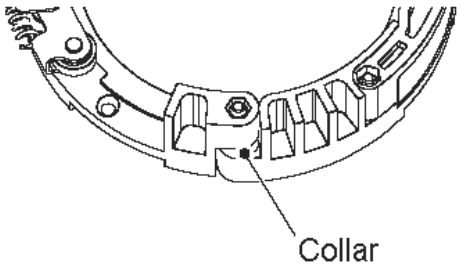

Figure 6-28

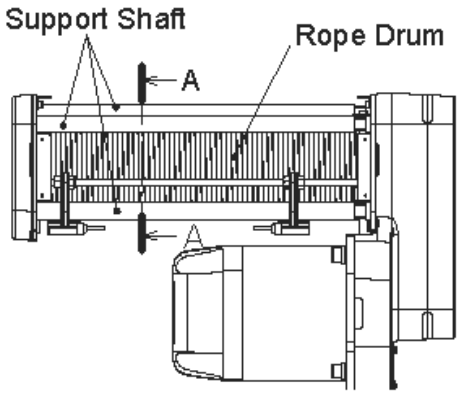

Figure 6-29

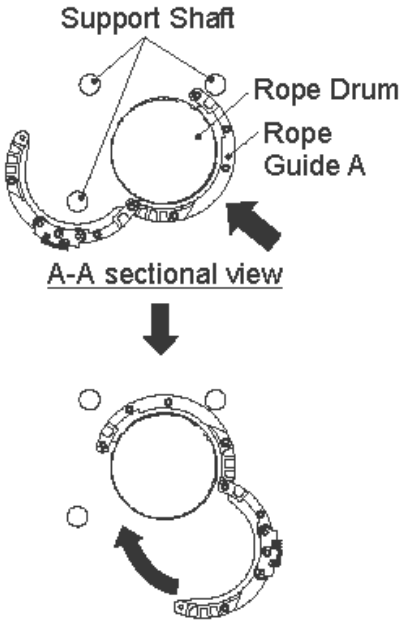

Figure 6-30

Figure 6-31

15) Referring to **Figure 6-32**, adjust the position of the Rope Guide so that the guide of the Rope Guide A contacts with the last wind of the Wire Rope on the Rope Drum. After the adjustment is finished, tighten the Socket Bolt indicated by the arrow to a torque value of approximately 53 lbf-inch (6 N*m) to fasten the Rope Guide onto the Rope Drum.

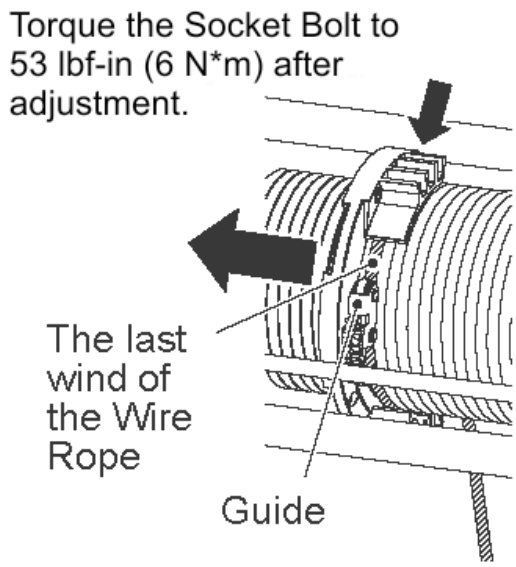

Figure 6-32

16) Hook the Rope Guide B on the Support Shaft as shown in **Figure 6-33** and fasten the Rope Guide B with the Socket Bolts. Pay special attention to attach the Rope Guide B so that the Wire Rope comes out from the gap between Rope Guide A and Rope Guide B.

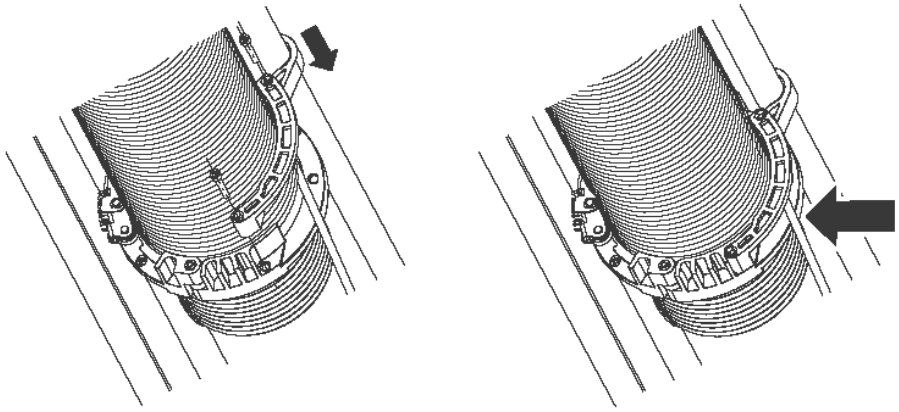

Figure 6-33

17) After completing the Wire Rope installation through the Rope Guide, place the Bottom Hook Block on the floor so that it is positioned perpendicular to the hoist. Slowly and carefully, insert the rope end into the bottom block as shown in **Figure 6-34**. To make rope insertion easier, temporarily attach a wire to the end of the Wire Rope with adhesive tape and use the wire to pull the Wire Rope through the first Sheave of the Bottom Hook Block. Securely tie a string or cord to the end of the Wire Rope and pull the Wire Rope up to the hoist from the scaffolding/platform.

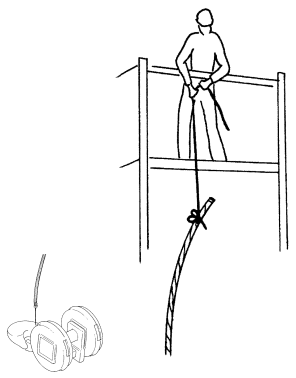

Figure 6-34

18) Then thread the Wire Rope through the return Sheave on the hoist (see **Figure 6-35**), then back down through the other Sheave on Bottom Hook Block (see **Figure 3-36**).

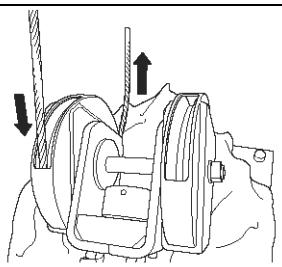

Figure 6-35

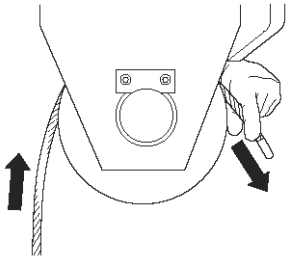

Figure 6-36

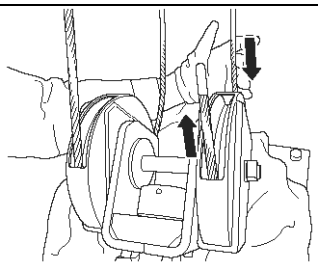

Figure 6-37

19) Insert the end of the Wire Rope into the Terminal being careful to pass through the side not having an arc shape indicated by “R” on **Figure 6-37**. Making a “loop”, insert the Wire Rope back into the Terminal making sure at least 4 inches of Wire Rope extend beyond the Terminal. Insert the Terminal Wedge into the “loop” as shown in **Figure 6-38**. Now pull the rope until the Terminal Wedge and the rope are tightly seated in the Terminal.

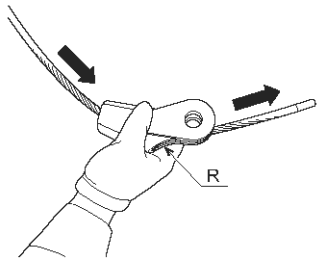

Figure 6-38

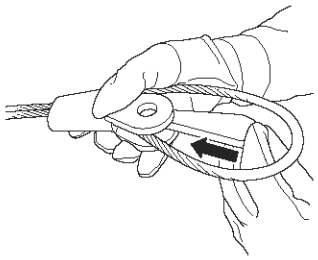

Figure 6-39

20) **WARNING** Make certain the wire rope is tight against the Terminal Wedge in the Terminal.

21) Attach the Wire Rope Clamp approximately 4 times the Wire Rope diameter from the Terminal as shown in **Figure 6-40** and fully tighten the nuts to a torque value of approximately 80 lbf-inch (9 N*m). Do NOT clamp the free end of the rope to the load bearing rope fall (the rope between the Terminal and the Bottom Hook Block) see **Figure 6-41**.

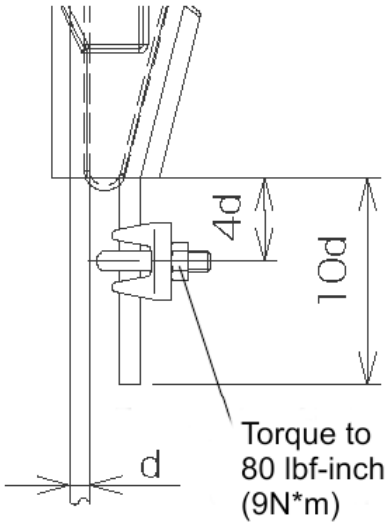

Figure 6-40

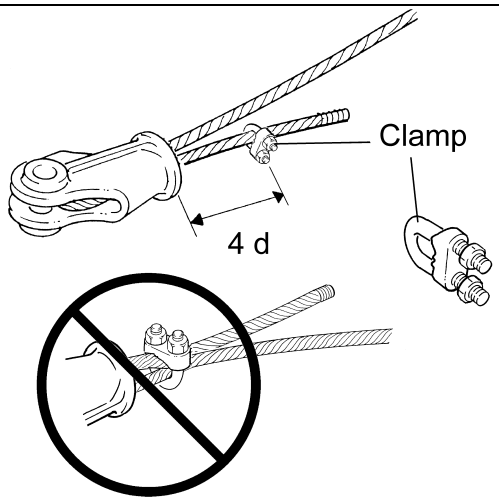

Figure 6-41

22) Insert the Terminal into the Rope Anchorage Assembly. Attach the Rope Anchorage Assembly into the Hangar using the Rope Anchorage Shaft as shown in **Figure 6-42**. Firmly reattach the Snap Ring to the Rope Anchorage Shaft as shown in **Figure 6-43**.

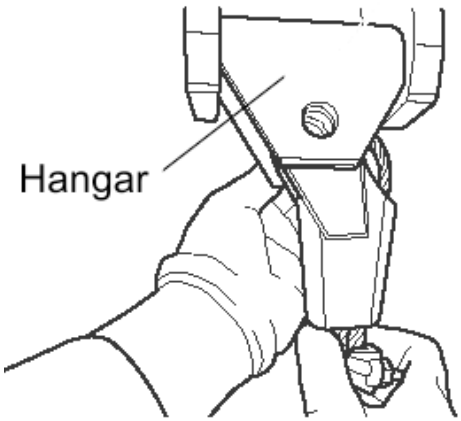

Figure 6-42

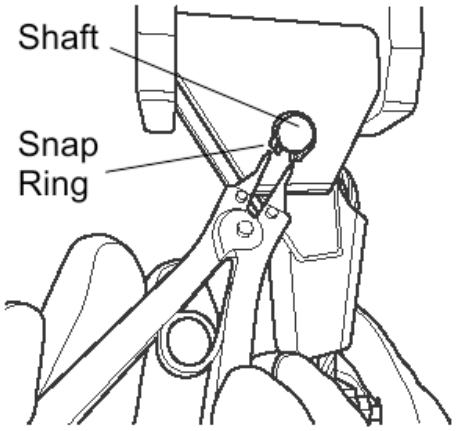

Figure 6-43

6.7 Storage

6.7.1 The storage location should be clean and dry.

6.7.2 Care should be taken to not damage any of the electrical power cords or fittings.

6.8 Outdoor Installations

6.8.1 For trolley hoist installations that are outdoors, the trolley hoist shall be covered and protected from the weather at all times.

6.8.2 A NEMA 4 rated pendant shall be used.

6.8.3 Avoid trolley hoist oxidation by using suitable treatment and lubricating all mechanisms.

6.8.4 Possibility of corrosion on components of the trolley hoist increases for installations where salt air and high humidity are present. The trolley hoist may require more frequent lubrication and frequent operation. Make regular inspections of the unit's condition and operation.

6.8.5 For trolley hoist installations where temperature variations introduce condensation into the trolley hoist may require additional inspection and more frequent lubrication and operation.

6.8.6 Refer to **Section 2.1.2** for allowable environmental conditions.

6.9 Operational Environment

6.9.1 Non-conforming environment – A non-conforming environment is defined as one with any or all of the following.

- Explosive gases or vapor.
- Organic solvents or volatile powder.
- Excessive amounts of powder and dust of general substances.
- Excessive amount of acids or salts.

7.0 Troubleshooting

7.1 General Troubleshooting

7.1.1 For electrical connections and schematics, refer to the drawing inside the control box or drawing 81700 available from Harrington Hoists.

⚠ WARNING

HAZARDOUS VOLTAGES ARE PRESENT IN THE HOIST AND IN CONNECTIONS BETWEEN COMPONENTS.

Before performing ANY maintenance on the equipment, de-energize the supply of electricity to the equipment, and lock and tag the supply device in the de-energized position. Refer to ANSI Z244.1, “Personnel Protection – Lockout/Tagout of Energy Sources.”

To avoid a shock hazard, **DO NOT** perform **ANY** mechanical or electrical maintenance on the dual speed (or VFD control) hoist within 5 minutes of de-energizing (disconnecting) the trolley or hoist. This time allows the internal VFD capacitor to safely discharge.

Only trained and competent personnel should inspect and repair this equipment.

Do Not perform “withstand voltage” test or “insulation resistance” measurement (megger) with the VFD connnected.

Do Not remove power to the hoist or trolley during operation.

Do Not connect power to the output of the VFD.

When handling VFD provide ESD protection.

Table 7-1 Troubleshooting Guide

Symptom	Cause	Remedy
Hoist moving in wrong direction	Improper electrical connections	Refer to wiring diagram and check all connections.
Hoist will not operate	Loss of power	Check circuit breakers, switches, fuses, and connections on power lines/cable.
	Wrong voltage or frequency	Check voltage and frequency of power supply against the rating on the nameplate of the motor.
	Hoist overloaded	Reduce load to within rated capacity of hoist.
	Motor overheated and thermal overload protector has tripped	See Trouble Shooting Problem "Motor or brake overheating".
	Improper, loose, or broken wire in hoist electrical system	Shut off power supply, check wiring connections on hoist control panel and inside push-button pendant.

Table 7-1 Troubleshooting Guide		
Symptom	**Cause**	**Remedy**
Hoist will not operate	Brake does not release	Check motor brake adjustment for proper clearance. . Replace brake if needed.
	Faulty Hoist VFD	Check fault codes (Reference **Section 7.2**). Reset VFD by pressing the Emergency Stop Button on pendant. Replace as needed.
	Emergency Stop Depressed on Push Button Pendant Control	"Hbb" will appear on the dual speed unit's VFD display when the Emergency Stop Button is depressed. Turn the Emergency Stop Button clockwise to unlock the controls and allow hoist operation.
	Defect in control transformer	Check transformer coil for signs of overheating. Disconnect transformer and check for open winding.
	Motor burned out	Replace motor frame/stator, shaft/rotor, and any other damaged parts.
Hoist lifts but will not lower	Down circuit open	Check circuit for loose connections. Check down limit switch for malfunction.
	Broken conductor in pendant cord	Check the continuity for each conductor in the cable. If one is broken, replace entire cable.
	Faulty Hoist VFD	Check fault codes (Reference **Section 7.2**). Reset VFD by pressing the Emergency Stop Button on pendant. Replace as needed.
	Faulty switch in pendant	Check electrical continuity. Check electrical connections. Replace or repair as needed.
	Faulty operational/ emergency limit switch.	Check hoist limit switch.
	Hoist is in bottom hook position.	
Hoist lowers but will not lift	Hoist overloaded	Reduce load to within rated capacity of hoist.
	Low voltage in hoist's power supply	Determine cause of low voltage and bring to within plus or minus 10% of the voltage specified on the motor nameplate. The voltage should be measured at the hoist contactor.
	Up circuit open	Check circuit for loose connections. Check up limit switch for malfunction.
	Faulty Hoist VFD	Check fault codes (Reference **Section 7.2**). Reset VFD by pressing the Emergency Stop Button on pendant. Replace as needed.
	Broken conductor in pendant cord	Check the continuity of each conductor in the cable. If one is broken, replace entire cable.
	Faulty switch in pendant	Check electrical continuity. Check electrical connections. Replace or repair as needed.
Hoist will not lift rated	Hoist overloaded	Reduce load to within rated capacity.

Table 7-1 Troubleshooting Guide		
Symptom	**Cause**	**Remedy**
Hoist will not operate load or does not have the proper lifting speed	Brake does not release	Check motor brake adjustment for proper clearance. . Replace brake if needed.
	Faulty Hoist VFD	Check fault codes (Reference **Section 7.2**). Reset VFD by pressing the Emergency Stop Button on pendant. Replace as needed.
	Emergency Stop Depressed on Push Button Pendant Control	"Hbb" will appear on the dual speed unit's VFD display when the Emergency Stop Button is depressed. Turn the Emergency Stop Button clockwise to unlock the controls and allow hoist operation.
	Defect in control transformer	Check transformer coil for signs of overheating. Disconnect transformer and check for open winding.
	Motor burned out	Replace motor frame/stator, shaft/rotor, and any other damaged parts.
	Low voltage in hoist's power supply	Determine cause of low voltage and bring to within plus or minus 10% of voltage specified on the motor nameplate. The voltage should be measured at the VFD.
	Faulty Hoist VFD	Check fault codes (Reference **Section 7.2**). Reset VFD by pressing the Emergency Stop Button on pendant. Replace as needed.
	Brake drags	Check motor brake adjustment for proper clearance.
	Open phase (single phase operation) – Motor "growling" sound.	Check for an electrical "open" in the power source/supply and correct.
	Improper Braking Resistor	Inspect Braking Resistor for breakage.
Load drifts excessively when hoist is stopped	Motor brake not holding	Clean and inspect brake lining. Check motor brake tolerances. Replace if necessary
	Faulty Hoist VFD	Check fault codes (Reference **Section 7.2**). Reset VFD by pressing the Emergency Stop Button on pendant. Replace as needed.
Hoist and/or Trolley Motor or brake Overheating	Excessive load	Reduce load to within rated capacity of hoist.
	Excessive duty cycle	Reduce frequency of lifts and/or trolley movement.
	Wrong voltage or frequency	Check voltage and frequency of power supply against the rating on the nameplate on the motor.
	Brake drags	Check motor brake adjustment for proper clearance.
	Extreme external heating	Above an ambient temperature of 104°F, the frequency of hoist operation must be reduced to avoid overheating of the motor. Special provisions should be made to ventilate the hoist or otherwise shield it from the heat.
Hoist and/or Trolley operates intermittently	Collectors making poor contact	Check movement of spring loaded arm, weak spring, connections, and shoe. Replace as needed.
	Loose connection in circuit	Check all wires and terminals for bad connections. Replace as needed.

Table 7-1 Troubleshooting Guide		
Symptom	**Cause**	**Remedy**
Hoist will not operate	Brake does not release	Check motor brake adjustment for proper clearance. . Replace brake if needed.
	Faulty Hoist VFD	Check fault codes (Reference **Section 7.2**). Reset VFD by pressing the Emergency Stop Button on pendant. Replace as needed.
	Emergency Stop Depressed on Push Button Pendant Control	"Hbb" will appear on the dual speed unit's VFD display when the Emergency Stop Button is depressed. Turn the Emergency Stop Button clockwise to unlock the controls and allow hoist operation.
	Defect in control transformer	Check transformer coil for signs of overheating. Disconnect transformer and check for open winding.
	Motor burned out	Replace motor frame/stator, shaft/rotor, and any other damaged parts.
	Broken conductor in Pendant Cord	Check for intermittent continuity in each conductor of the Pendant Cord. Replace entire Pendant Cord if continuity is not constant.
	Faulty Hoist and/or Trolley VFD	Check fault codes (Reference **Section 7.2**). Reset VFD by pressing the Emergency Stop Button on pendant. Replace as needed.
Trolley will not operate	Loss of power	Check circuit breakers, switches, fuses and connections on power lines/cable.
	Wrong voltage or frequency	Check voltage and frequency of power supply against the rating on the nameplate of the motor.
	Motor overheated and thermal overload protector has tripped	See Troubleshooting Problem "Motor or brake overheating".
	Improper, loose, or broken wire in trolley electrical system	Shut off power supply, check wiring connections in the trolley switch box, on hoist control panel and inside push-button pendant.
	Emergency Stop Depressed on Push Button Pendant Control	"Hbb" will appear on the dual speed unit's VFD display when the Emergency Stop Button is depressed. Turn the Emergency Stop Button clockwise to unlock the controls and allow hoist operation.
	Motor burned out	Replace motor frame/stator, shaft/rotor, and any other damaged parts.
Trolley drifts excessively when stopping	Motor brake not holding	Clean and inspect brake lining. Check motor brake tolerances. Replace if necessary
	Faulty Trolley VFD	Check fault codes (Reference **Section 7.2**). Reset VFD by pressing the Emergency Stop Button on pendant. Replace as needed.
	VFD Deceleration parameter adjusted incorrectly (Dual Speed only)	Readjust VFD Deceleration parameter (Reference Section 3.11).
Motor or brake	Excessive duty cycle	Reduce frequency of trolley movement.

Table 7-1 Troubleshooting Guide		
Symptom	**Cause**	**Remedy**
Hoist will not operate	Brake does not release	Check motor brake adjustment for proper clearance. . Replace brake if needed.
	Faulty Hoist VFD	Check fault codes (Reference **Section 7.2**). Reset VFD by pressing the Emergency Stop Button on pendant. Replace as needed.
	Emergency Stop Depressed on Push Button Pendant Control	"Hbb" will appear on the dual speed unit's VFD display when the Emergency Stop Button is depressed. Turn the Emergency Stop Button clockwise to unlock the controls and allow hoist operation.
	Defect in control transformer	Check transformer coil for signs of overheating. Disconnect transformer and check for open winding.
	Motor burned out	Replace motor frame/stator, shaft/rotor, and any other damaged parts.
overheating	Extreme external heating	Above an ambient temperature of 140°F, the frequency of trolley operation must be reduced to avoid overheating of the motor. Special provisions should be made to ventilate the trolley or otherwise shield it from the heat.
Trolley making loud noise.	Trolley wheel maladjusted on beam	Readjust the gap between the trolley wheel flange and the beam flange.
Trolley will not move	Trolley wheel spacing on beam too tight	Readjust the gap between the trolley wheel flange and the beam flange.
Abnormal noise from wire rope and/or drum	Lack of lubrication, worn wire rope/drum/sheaves	Lubricate or replace wire rope/drum/sheaves

7.2 VFD Troubleshooting

7.2.1 If the VFD or motor runs irregularly, check the alarm/error on the LED display. Details of the types of alarms and errors shown in **Table 7-2** and are as follows:

- Error
- Minor Failure/Warning
- Operation Error

Table 7-2 Types of Alarms and Errors

Type	Status of the VFD in case of an alarm or error	Display Summary	Display Details and Remedies
Error	When an **Error** is detected, the following states occur: • Characters indicating the details of the error are displayed on the LED, and the ALM mode turns on. • The VFD output is shut down, and the motor stops after a free run. (However, a manner to stop can be preset depending on the sorts of errors.)	**Table 7-3**	**Table 7-6**
Minor Failure/ Warning	When **Minor Failure/Warning** is detected, the following states occur: • Characters indicating the details of the minor failure blink on the LED, and the ALM mode blinks. • The motor does not stop. Measures: After detection of minor failure/warning, remove the cause. The VFD automatically returns to the original state.	**Table 7-4**	**Table 7-7**
Operation Error	An **Operation Error** is displayed for a parameter input error, wrong combination ofparameters, or failure of the option card. When an operation error is detected, the following state occurs: • Characters indicating the details of the error are displayed on the LED. Measures: After detection of an error, remove the cause of the error by setting the parameter, etc. The VFD cannot start until the parameter is set correctly.	**Table 7-5**	**Table 7-8**

Table 7-3 "Error" Type Summary		
LED Display		**Name**
2	CF	Control error
CPF03	CPF03	EEPROM failure
CPF06	CPF06	EEPROM data error
CPF07	CPF07	Terminal board communication error
CPF08	CPF08	EEPROM serial communication error
CPF11	CPF11	RAM error
CPF12	CPF12	Flash memory error
CPF13	CPF13	Watchdog error
CPF14	CPF14	Control circuit error
CPF16	CPF16	Clock error
CPF17	CPF17	Interrupt error
CPF18	CPF18	Control circuit error
CPF19	CPF19	Control circuit error
CPF20 or CPF21	CPF20 or CPF21	RAM error
		Flash memory error
		Watchdog error
		Clock error
CrST	CrST	Reset disabled during driving command input
EF1 to EF7	EF1 to EF7	External error (Input terminal S1 to S7)
GF	GF	Ground fault
LF	LF	Output phase interruption
oC	oC	Overcurrent
oH	oH	Heat sink overheat
oH1	oH1	Heat sing overheat
oL1	oL1	Motor overload
oL2	oL2	VFD overload
oL3	oL3	Over-torque detection 1
oL4	oL4	Overload detection by overload limiter
oLF	oLF	Overload detection by overload limiter
ov	ov	Main circuit overvoltage
PF	PF	Main circuit voltage error
rr	Rr	Internal damping transistor error
Uv1	Uv1	Main circuit low voltage
Uv2	Uv2	Control power supply error
Uv3	Uv3	Inrush prevention circuit error

Table 7-4 "Minor Failure/ Warning Error" Type Summary		
LED Display		**Name**
EF	EF	Forward/reverse command simultaneous input
EF1 **to** EF7	EF1 to EF7	External error (Input terminal S1 to S7)
Hbb	Hbb	Inputting a safety signal
HCA	HCA	Current warning
oH	oH	Heat sink overheat
ov	Ov	Main circuit overvoltage
CrST	CrST	Reset during driving command input
Uv	Uv	Main circuit low voltage

Table 7-5 "Operation Error" Type Summary		
LED Display		Name
oPE02	oPE02	Invalid parameter setting range

Table 7-6 "Error" Display Details and Remedies		
LED Display		Error name
CF	CF	Control error
		Torque limit took 3 seconds or more in succession during deceleration/stop
Cause		Measure
Load inertia is high.		- Adjust the parameters used among C1-02, -04, -06, -08 (deceleration time). - Lower the frequency command to the minimum output frequency for deceleration, and then turn off the driving command.
LED Display		Error name
CPF03	CPF03	EEPROM failure
		EEPROM does not function
CPF06	CPF06	EEPROM data error
		Data stored in the EEPROM is erroneous.
Cause		Measure
Control circuit is damaged.		Turn on/off the power supply to check operation. -If the error occurs again, replace the VFD
LED Display		Error name
CPF07	CPF07	Terminal board communication error
		Failure with the terminal board
Cause		Measure
Failure between the terminal board and control board		-Turn off the power supply of the VFD and re-connect the control circuit terminal.

Table 7-7 "Error" Display Details and Remedies *(Continued)*		
LED Display		Error name
CPF08	CPF08	EEPROM serial communication error
		Failure with the EEPROM
Cause		Measure
Failure between the terminal board and control board		-Turn off the power supply of the VFD, and re-connect the control circuit terminal.
LED Display		Error name
CPF11	CPF11	RAM error
		RAM error
CPF12	CPF12	Flash memory error
		ROM (flash memory) error
CPF13	CPF13	Watchdog error
		Self diagnosis error
LED Display		Error name
CPF14	CPF14	Control circuit error
		CPU failure (malfunction of CPU due to noise)
CPF16	CPF16	Clock error
		Reference clock error
CPF17	CPF17	Interrupt error
		Timing of internal processing was erroneous
CPF18	CPF18	Control circuit error
		CPU failure (malfunction of CPU due to noise)
CPF19	CPF19	Control circuit error
		CPU failure (malfunction of CPU due to noise)
CPF20 or CPF21	CPF20 or 21	Any of the following errors occurred: RAM error/ FLASH error/ watchdog circuit
Cause		Error name
CrST	CrST	Reset disabled while a driving command is being input
		A reset signal was input with the driving command being input from an external terminal, etc.
Cause		Measure
Unstable power supply, big voltage drop, loosened power wiring, loosened wiring of the emergency stop button		Check the power supply voltage and the wiring to the inverter.
LED Display		Error name
EF1 to EF7	EF1 to EF7	External error (Input terminal S1 to S7)
		An external error was inputted from the multifunction contact input terminal (S1 to S7)
Cause		Measure
The alarm function of the external equipment is operating.		-Remove the cause of the external error, and remove the external error input of the multifunction input.
Wiring is not correct.		Check if the signal line is connected correctly. -Connect the signal line correctly.

Table 7-7 "Error" Display Details and Remedies *(Continued)*		
LED Display		Error name
GF	GF	Ground fault
		The ground-fault current exceeded about 50% of the inverter rated output current in the VFD output side
Cause		Measure
Motor burnout or insulation degradation occurred.		Check the insulating resistance of the motor -Replace the motor if conduction occurs.
Contact or ground fault occurred due to cable damage.		Check the resistance value between the cable and the ground terminal. -Replace the cable if conduction occurs.
		Check the motor power cable - Remove the part with a ground fault, and turn on the power supply again.
The floating capacitance between the cable and ground terminal is high.		-If the cable length is over 300 feet, lower the carrier frequency. -Take measures to reduce floating capacitance.
LED Display		Error name
LF	LF	Output phase interruption
		Phase interruption occurred in the VFD output side.
Cause		Measure
The output cable was broken.		Check the output cable wiring for a break or wrong wiring. -Perform wiring correctly.
LED Display		Error name
oC	oC	Overcurrent
		A VFD output current exceeding the overcurrent detection level was detected.
Cause		Measure
Motor burnout or insulation degradation occurred.		Check the insulating resistance of the motor -Replace the motor if conduction occurs.
Contact or ground fault occurred.		Check the motor power cable -Remove the part with a ground fault, and turn on the power supply again.
		Check the resistance value between the cable and the ground terminal. -Replace the cable if conduction occurs.
The load is too high.		Measure the current flowing through the motor. -If the current value exceeds the rated current of the VFD, reduce the load. Check if the current value changes suddenly. -If the current changes suddenly, reduce the load fluctuation.
Malfunction occurred due to noise.		Check the state of the noise measures. -Check the wiring of the control circuit as well as wiring and ground wiring of the main circuit, and take sufficient noise measures. -If the noise generation source is the electromagnetic contactor, connect a surge absorber to the coil of the electromagnetic contactor.
Catch of motor lead wire, etc.		Check the wiring.

Table 7-7 "Error" Display Details and Remedies *(Continued)*		
LED Display		Error name
oH	oH	Heat sink overheat
		The heat sink temperature of the VFD exceeded the setting value (90 to 100°C, or approximately 195 to 210°F)
oH1	oH1	Heat sink overheat
		The heat sink temperature of the VFD exceeded 100 to 110
Cause		Measure
The ambient temperature is too high.		Check the ambient temperature. -Remove any nearby heating elements -Use it within the rated ambient temperature range.
The frequency is too high.		-Use it within the rated range.
The load is too high.		Measure the output current. -Reduce the load.
LED Display		Error name
oL1	oL1	Motor overload
		The motor overload protection tripped due to electronic thermal.
Cause		Measure
The load is too high.		Check the amount of load.
Malfunction of the magnetic brake		Check the wiring for the magnetic brake
LED Display		Error name
oL2	oL2	VFD overload
		The VFD overload protection tripped due to electronic thermal.
Cause		Measure
The load is too high.		Check the amount of load. -Reduce the load.
LED Display		Error name
oL3	oL3	Over-torque detection 1
		A motor torque exceeding the setting value was output.
oL4	oL4	Overload detection by the overload limiter
		The overload limiter tripped.
oLF	oLF	Overload detection by the overload limiter
		The overload limiter tripped.
Cause		Measure
The load is too high.		Check the amount of load. -Reduce the load.

Table 7-7 "Error" Display Details and Remedies *(Continued)*		
LED Display		Error name
ou	ov	Main circuit overvoltage
		The main circuit DC voltage exceeded the overvoltage detection level. 208-230V: Approximately 410V 415-460V: Approximately 820V
A ground fault of the motor occurred. (A ground-fault current is charging the main circuit capacitor in the VFD via the power supply.)		Check the power cable, relay terminal, and motor terminal box of the motor. - Remove the part with a ground fault, and turn on the power supply again.
The power supply voltage is too high.		Check the voltage. -Lower the voltage to the power supply specification of the inverter (VFD).
The damping transistor is broken.		-Replace the VFD.
The wiring of the damping resistor or damping resistor unit is not correct.		Check the connection to the damping resistor or damping resistor unit for wrong wiring. -Perform wiring correctly.
Malfunction occurred due to noise.		Check the state of the noise measures. -Check the wiring of the control circuit as well as the wiring and ground wiring of the main circuit, and take sufficient noise measures.
LED Display		Error name
PF	PF	Main circuit voltage error
		The main circuit DC voltage fluctuates abnormally other than during regeneration.
Cause		Measure
Phase interruption of the input power supply occurred.		Check the main circuit power supply wiring for a break or wrong wiring. -Perform wiring correctly.
The wiring terminal of the input power supply is loose.		Check the terminal for looseness.
The voltage fluctuation of the input power supply is too high.		Check the power supply voltage. -Take measures for power stabilization.
The interphase voltage balance is poor.		Check the power supply voltage, and take measures for power supply stabilization.
The main circuit capacitor inside the VFD is deteriorated.		Check the input power supply for an error. If there is no error in the power supply side and alarms still occur frequently, replace the VFD.

Table 7-7 "Error" Display Details and Remedies *(Continued)*		
LED Display		Error name
rr	rr	Internal damping transistor error
		Operation of the damping transistor is erroneous.
Cause		Measure
The damping transistor is broken.		Turn on/off the power supply to check if an error occurs. -If the error occurs in succession, replace the VFD.
Defective VFD control circuit		
Improper wiring of the braking resistor or braking resistor unit		Check that there is no erroneous connection in the wiring of the braking resistor or braking resistor unit,. -Ensure proper wiring.
VFD hardware error		Turn on/off the power supply to check operation. -If the error occurs again, replace the VFD.
LED Display		Error name
Uv1	Uv1	Main circuit low voltage
		The following states occurred when no driving command is inputted (when the VFD is not operating). -The main circuit DC voltage is below the setting value. 200V class: Lifting: Approx. 200V, Traversing: Approximately 190V 400V class: Approx. 380V
Cause		Measure
Phase interruption of the input power supply occurred.		Check the main circuit power supply wiring for a break or wrong wiring. ⇒ Perform wiring correctly.
The wiring terminal of the input power supply is loose.		Check the terminal for looseness. ⇒ Re-tighten the terminal.
An error occurred in the power supply voltage.		Check the voltage. ⇒ Adjust the voltage to the range of the power supply specification of the VFD.
Power failure occurred.		⇒ Check the power supply.
The internal circuit of the VFD is deteriorated.		⇒ Replace the VFD.
The power supply voltage drops at an inrush current of the VFD due to insufficient capacity of the power supply transformer.		Check if an alarm occurs when the wiring breaker, earth leakage breaker (with overcurrent protection function), or electromagnetic contactor is ON. ⇒ Review the power supply transformer capacity.
VFD internal atmosphere error		⇒ Check the ambient temperature of the VFD.
CHARGE lamp failure (lamp break)		⇒ Replace the VFD.
LED Display		Error name
Uv2	Uv2	Control power supply error
		The control power supply voltage dropped.
Cause		Measure
VFD internal circuit error		Turn on/off the power supply to check if an error occurs. ⇒ If the error occurs in succession, replace the inverter (VFD).

Table 7-7 "Minor Failure/ Warning Error" Display Details and Remedies *(Continued)*		
LED Display		Error name
Uv3	Uv3	In-rush prevention circuit error
		Failure of the in-rush prevention circuit occurred.
Cause		Measure
Failure of the contactor of the in-rush prevention circuit inside the VFD		Turn on/off the power supply to check if an error occurs. ⇒ If the error occurs in succession, replace the VFD.
VFD internal atmosphere error		Check the ambient temperature of the VFD.

Table 7-8 "Minor Failure/ Warning" Display Details and Remedies		
LED display		Minor failure name
EF	EF	Forward/reverse command simultaneous input
		The forward rotation command and reverse rotation command were inputted simultaneously for 0.5 seconds or more.
Cause		Measure
Sequence error		Review and modify the wiring of the forward/reverse command.
LED display		Minor failure name
EF1 to EF7	EF1 to EF7	External error (Input terminal S1 to S7)
		An external error was inputted from the multifunction contact input terminal (S1 to S7)
Cause		Measure
The alarm function of the external equipment is operating.		-Remove the cause of the external error input of the multifunction input.
The wiring is not correct.		Check that the signal line is correctly connected to the external input terminal. -Connect the signal line correctly.
LED Display		Minor failure name
Hbb	Hbb	Safety signal is being inputted.
		A safety signal was inputted from the input terminal.
Cause		Measure
		-If not reset by releasing the emergency stop button, check the wiring related to the push button switches (signal line).
LED Display		Minor failure name
HCA	HCA	Current warning
		The VFD output current exceeded the overcurrent warning level (150% of the rated current).
Cause		Measure
The load is too high.		Measure the current flowing through the motor. ⇒ If overload occurs, reduce the load, or increase the inverter (VFD) capacity.

Table 7-8 "Minor Failure/ Warning" Display Details and Remedies *(Continued)*		
LED display		Minor failure name
oH	oH	Heat sink overheat
		The VFD heat sink temperature exceeded the setting value (90 to 100°C) (that varies depending on the VFD capacity)
Cause		Measure
The ambient temperature is too high.		Check the ambient temperature. ⇒ Use it at an ambient temperature of 40oC or lower. ⇒ Remove heating elements nearby, if any.
LED display		Minor failure name
ou	ov	Main circuit overvoltage
		The main circuit DC voltage exceeded the overvoltage detection level when no driving command is inputted (when the VFD is not operating). 200V class: Approx. 410V 400V class: Approx. 820V
Cause		Measure
Surge voltage was mixed into the input power supply.		⇒ Install a DC reactor. ⇒ If the phase advance capacitor is turned on/off or the thyristor conversion device operates within the same power supply system, an abnormal rapid rise (surge) of the input voltage may occur temporarily.
A ground fault of the motor occurred. (A ground-fault current is charging the main circuit capacitor in the VFD via the power supply.)		Check the power cable, relay terminal, and motor terminal box of the motor. ⇒ Remove the part with a ground fault, and turn on the power supply again.
Malfunction occurred due to noise.		Check the state of the noise measures. ⇒ Check the wiring of the control circuit as well as wiring and ground wiring of the main circuit, and take sufficient noise measures. ⇒ If the noise generation source is the electromagnetic contactor, connect a surge absorber to the coil of the electromagnetic contactor.
LED display		Minor failure name
CrST	CrST	Reset during driving command input
		An error reset signal was inputted while the driving command was being inputted.
Cause		Measure
An error reset was inputted while the driving command was being inputted.		Check if the driving command is inputted from the external terminal or communication card upon an error reset. ⇒ Turn off the driving command.

Table 7-8 "Minor Failure/ Warning" Display Details and Remedies *(Continued)*		
LED display		Minor failure name
Uv	Uv	Main circuit low voltage
		The following states occurred when no driving command is inputted (when the VFD is not operating). ⇒The inrush current suppression contactor inside the VFD was released. ⇒ The control power supply became low.
Cause		Measure
Phase interruption of the input power supply occurred.		Check the main circuit power supply wiring for a break or wrong wiring. ⇒ Perform wiring correctly.
The wiring terminal of the input power supply is loose.		Check the terminal for looseness. ⇒ Re-tighten the terminal.
An error occurred in the power supply voltage.		Check the voltage. ⇒ Adjust the voltage to the range of the power supply specification of the VFD.
Power failure occurred.		⇒ Adjust the power supply
The power supply voltage drops at an inrush current of the VFD due to insufficient capacity of the power supply transformer.		Check if an alarm occurs when the wiring breaker, earth leakage breaker (with overcurrent protection function), or electromagnetic contactor is ON. ⇒ Review the power supply transformer capacity.
VFD internal atmosphere error		⇒ Check the ambient temperature of the VFD.
CHARGE lamp failure (lamp break)		⇒ Replace the VFD.

Table 7-9 "Operation Error" Display Details and Remedies		
LED display		Error name
oPE02	oPE02	Invalid parameter setting range
		A value outside the range was set to the parameter.
Cause		Measure
A value outside the range was set to the parameter.		Check which of the parameters are set erroneously with U1-18 (OPE error parameter). ⇒ Set the parameter correctly.
Note: If two or more operation errors occurred simultaneously, OPE mm is displayed in priority to OPE02.		

7.3 VFD Error Reset and Restart

7.3.1 **Error reset** - When an error occurred, restart the VFD after removing the cause of the error. To restart the VFD, turn on/off the emergency stop button. If the VFD is not reset, (1) Turn it on/off several times. (2) If the VFD is too hot, cool it down before resetting.

7.3.2 **Restarting the VFD after an error** - If the VFD stopped due to an error, check the cause in the following steps, and take measures so that the VFD can operate again.

⚠ DANGER

Before turning on the power supply of the VFD, check the following:

There is no short circuit between the main circuit terminals R/L1, S/L2, and T/L3
There is no short circuit from the main circuit terminals R/L1, S/L2, and T/L3 to ground.

Failure to comply with the instructions may cause serious or even fatal injury, or VFD damage.

1) Turn on the power supply of the VFD.
2) Check the details and cause of the error that has just occurred using the error trace parameter U2-mm. U2-02 (past error) indicates which error caused the shutdown of the power supply. U2-03 to U2-13 indicate the states of the VFD when the error occurred (frequency, current, voltage, etc.). U3-01 to U3-10 indicate error history (for 10 errors). For information on how to check the error trace, below.
3) Remove the cause of the error. For measures against errors, refer to Details and Remedies **Tables 7-7, 7-8 and 7-9**.

NOTICE

If the error is still displayed when the power supply is turned on, remove the cause of the error and perform an error reset operation.

7.3.3 If the VFD power supply was not shut down upon an error,

1) Check the type of the error with the LED operator.
2) Remove the cause of the error. For measures against errors, refer to Details and Remedies **Tables 7-7, 7-8 and 7-9**.
3) Perform an error reset.

7.4 VFD Monitoring, Error Trace and Error History

7.4.1 The monitor parameter (U parameter) shows parameters that can be monitored in the drive mode:

- U1 – State Monitor, **Table 7-10**
- U2 – Error Trace, **Table 7-11 and 7-12**
- U3 – Error History, **Table 7-13**

Table 7-10 U1 State Monitor

No.	Name	Description
U1-03	Output current	Displays the output current.
U1-10	Input terminal state	Checks on/off the input terminal 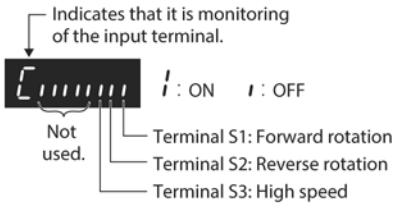
U1-11	Output Terminal State	Checks on/off of the output terminal. Checks on/off of the input terminal. 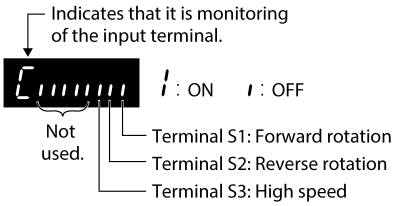
U1-12	Driving state	Checks the state of the VFD 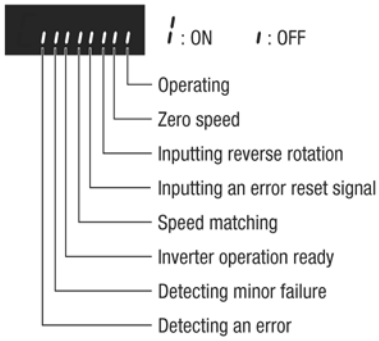

Table 7-11 U2 Error Trace		
No.	**Name**	**Description**
U2-01	Current error	Checks the details of the current error.
U2-02	Past error	Checks the details of the error that occurred immediately before the past error.
U2-03	Frequency command upon an error	Displays the frequency command value when the "past error" occurred.
U2-04	Output frequency upon an error	Displays the output frequency when the "past error" occurred.
U2-05	Output current upon an error	Displays the output current when the "past error" occurred.
U2-07	Output voltage command upon an error	Displays the output voltage command when the "past error" occurred.
U2-11	Input terminal state upon an error	Displays the input terminal state when the "past error" occurred (similar state display as U1-10).
U2-12	Output terminal state upon an error	Displays the output terminal state when the "past error" occurred (similar state display as U1-11).
U2-13	Driving state upon an error	Displays the driving state when the "past error" occurred (similar state display as U1-12).

Table 7-12 Checking the Error Trace (oC overcurrent shown)	
Operational Step	**VFD Display**
1. Energize the hoist.	F 0.00 ALM REV DRV OUT Default Screen
2. Press ∧ until the monitor display screen is displayed	Mon
3. Press ENTER to display the parameter setting screen.	U1-01 Parameter setting screen
4. Press ∧ or ∨ to display U2-02 (past error).	U2-02
5. Press ENTER to confirm. The current error details are displayed.	oC Overcurrent
6. Press ESC to return to the U2-02 screen.	U2-02
7. To monitor the information about U2-03 to 13, press UP. Data that is helpful for finding the cause of the error can be obtained.	U2-03 ↓↑ U2-13

Table 7-13 U3 Error History		
No.	**Name**	**Description**
U3-01	Details of the previous error	Displays the details of the previous error
U3-02	Details of the error 2 errors before	Displays the details of the error 2 errors before
U3-03	Details of the error 3 errors before	Displays the details of the error 3 errors before
U3-04	Details of the error 4 errors before	Displays the details of the error 4 errors before
U3-05	Details of the error 5 errors before	Displays the details of the error 5 errors before
U3-06	Details of the error 6 errors before	Displays the details of the error 6 errors before
U3-07	Details of the error 7 errors before	Displays the details of the error 7 errors before
U3-08	Details of the error 8 errors before	Displays the details of the error 8 errors before
U3-09	Details of the error 9 errors before	Displays the details of the error 9 errors before
U3-10	Details of the error 10 errors before	Displays the details of the error 10 errors before

8.0 Warranty

All products sold by Harrington Hoists, Inc. are warranted to be free from defects in material and workmanship from date of shipment by Harrington for the following periods:

1 year – Electric and Air Powered Hoists (excluding (N)ER2 Enhanced Features Models, EQ / SEQ Hoists), Powered Trolleys, Powered Tiger Track Jibs and Gantries, Crane Components, Spare / Replacement Parts, Below-the-Hook and Material Handling Equipment

2 years – Manual Hoists & Trolleys, Beam Clamps

3 years – (N)ER2 Enhanced Features Model Hoists, EQ / SEQ Hoists, RY Wire Rope Trolley Hoists

5 years – Manual Tiger Track Jibs and Gantries, TNER, EQ / SEQ and RY Pull-Rotor Motor Brake

10 years – (N)ER2 "The Guardian" Smart Brake

The product must be used in accordance with manufacturer's recommendations and must not have been subject to abuse, lack of maintenance, misuse, negligence, or unauthorized repairs or alterations.

Should any defect in material or workmanship occur during the above time period in any product, as determined by Harrington Hoist's inspection of the product, Harrington Hoists, Inc. agrees, at its discretion, either to replace (not including installation) or repair the part or product free of charge and deliver said item F.O.B. Harrington Hoists, Inc. place of business to customer.

Customer must obtain a Return Goods Authorization as directed by Harrington or Harrington's published repair center prior to shipping product for warranty evaluation. An explanation of the complaint must accompany the product. Product must be returned freight prepaid. Upon repair, the product will be covered for the remainder of the original warranty period. Replacement parts installed after the original warranty period will only be eligible for replacement (not including installation) for a period of one year from the installation date. If it is determined there is no defect, or that the defect resulted from causes not within the scope of Harrington's warranty, the customer will be responsible for the costs of returning the product.

VFD Harrington Hoists, Inc. disclaims any and all other warranties of any kind expressed or implied as to the product's merchantability or fitness for a particular application. Harrington will not be liable for death, injuries to persons or property or for incidental, contingent, special or consequential damages, loss or expense arising in connection with the use or inability whatever, regardless of whether damage, loss or expense results from any act or failure to act by Harrington, whether negligent or willful, or from any other reason.

9.0 Parts List

When ordering Parts, please provide the hoist product code and serial number located on the hoist nameplate (see fig. below).

Reminder: Per **Sections 1.1** and **3.9.1** to aid in ordering Parts and Product Support, record the hoist product number and serial number in the space provided on the cover of this manual.

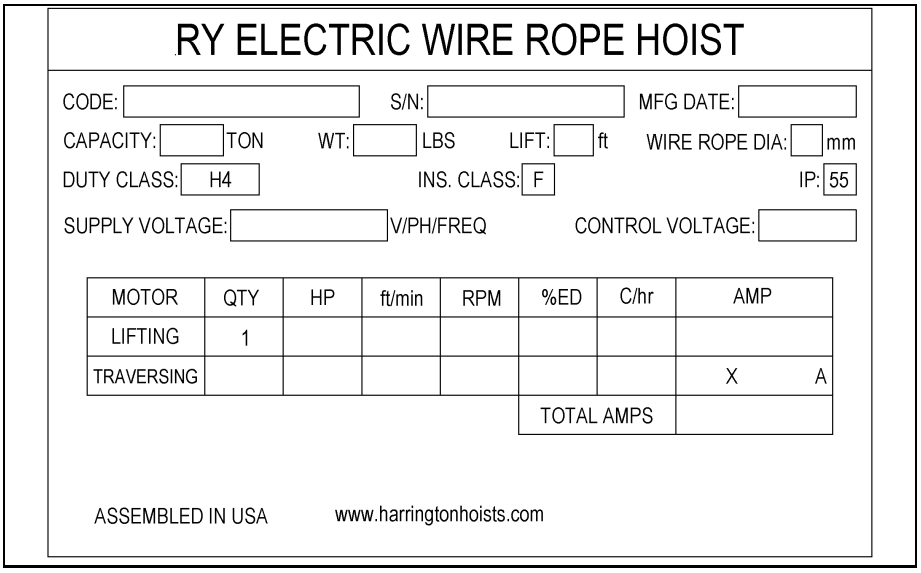

The parts list is arranged into the following sections:

Section **Page**

9.1 Hoist Gearbox Parts....102
9.2 Rope Drum Parts....103
9.3 Trolley Frame Parts....104
9.4 Hook Block Parts....106
9.5 Rope Anchorage Parts....107
9.6 Rope Guide Parts....108
9.7 Idle Sheave Parts....109
9.8 Lifting Limit Switch (ULLS) Parts....110
9.9 Block Operated Limit Switch (BLS) Parts....111
9.10 Hoist Motor Parts Parts....112
9.11 Trolley Motor Parts....114
9.12 Control Panel/Box Parts....116

In the column "Parts Per Hoist" a designator is used for parts that apply only to a particular model or option. Refer to **Section 2** for hoist model numbers and additional descriptions. The designators are:

9.1 Hoist Gearbox Parts

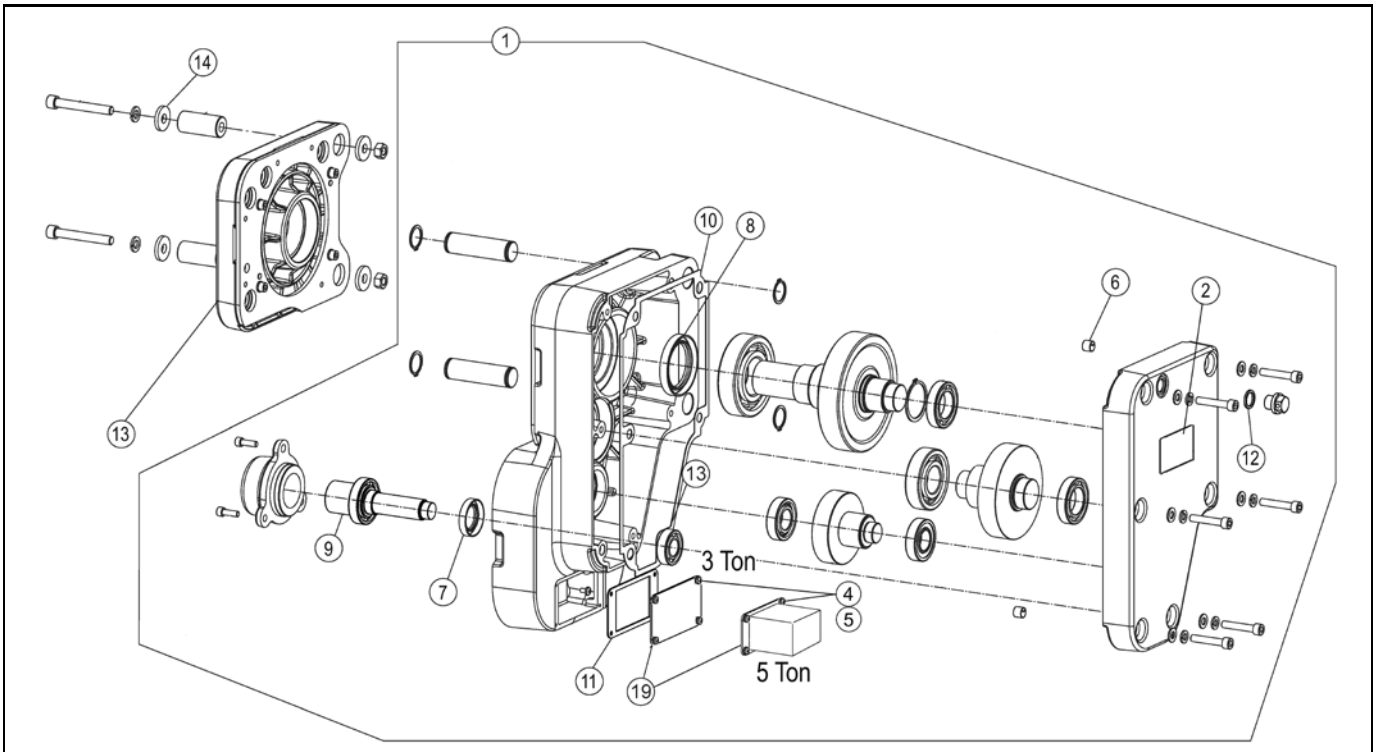

Figure 9-1-1 Hoist Gearbox

Figure No.	Part Name	Parts Per Hoist	RYU030	RYU050
1	Gear Box Assembly – 208-230V	1	R-1ALBH-4701	R-1BLBH-4501
	Gear Box Assembly – 415-460V		R-1ALBH-4501	
2	Capacity Label	1	80673	80674
3	Terminal Cover – 208-230V	1	R-1ALBC-9071	
	Terminal Cover – 415-460V		R-1BLBH-9071	
4	Machine Screw w/Lock Washer	4	J1AP2-5001212	
5	Flat Washer	4	9016507	
6	Set Pin S	2	R-1ALBC-9005	
7	Oil Seal	1	R-1ALBC-9003	
8	Oil Seal	1	R-1ALBC-9004	
9	Pinion Subassembly	1	R-1ALBC-6006	R-1BLBC-6506
10	Packing	1	R-1ALBC-9061	
11	Terminal Packing	1	R-1ALBC-9072	
12	Rubber Ring	1	R-1ALBC-9082	
13	Back Frame	1	R-1ALBC-9041	
14	Connection Washer	4	R-1ALBC-9057	

9.2 Rope Drum Parts

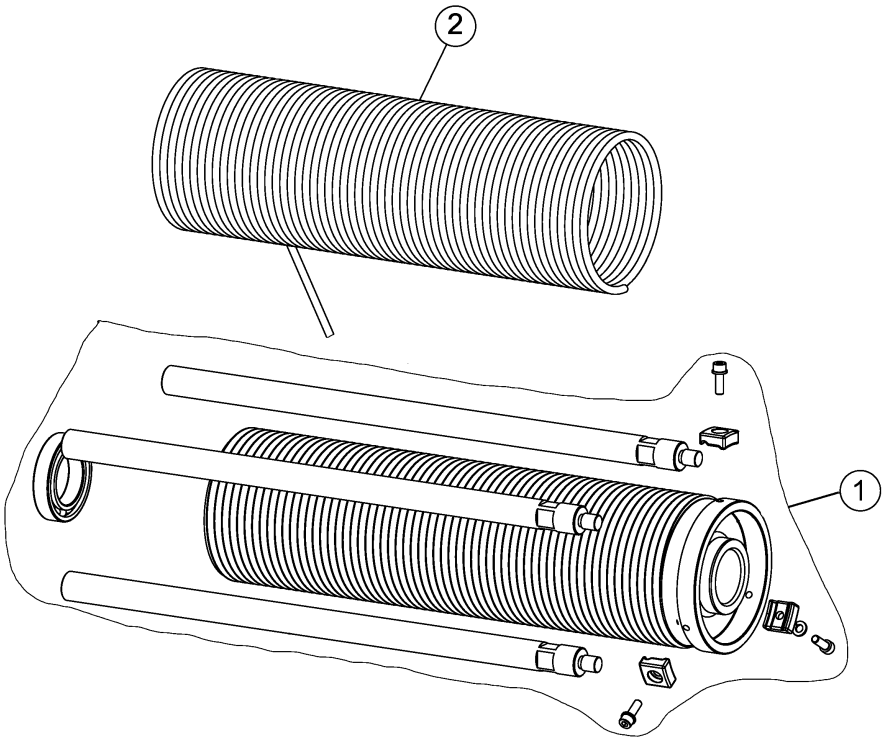

Figure 9-2 Rope Drum Parts

Figure No.	Part Name	Parts Per Hoist	RYU030	RYU050
1	Rope Drum Assembly – 25 ft. Lift	1	R-1ALCH-1101	
	Rope Drum Assembly – 33 ft. Lift		R-1ALCH-1201	
2	Wire Rope – 25 ft. Lift	1	83352	
	Wire Rope – 33 ft. Lift		83353	

9.3 Trolley Frame Parts

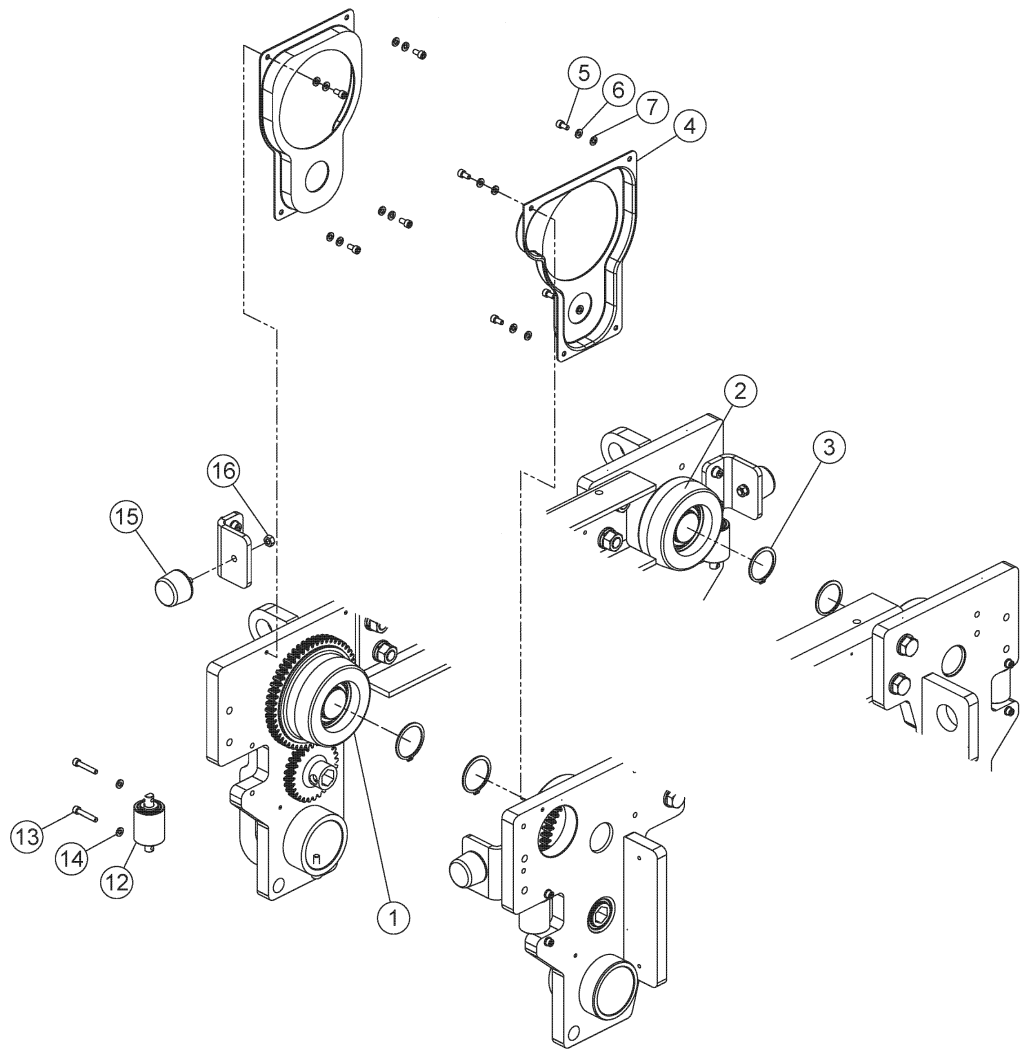

Figure 9-3 Trolley Frame Parts

9.3 Trolley Frame Parts

Figure No.	Part Name	Parts Per Hoist	RYU030	RYU050
1	Wheel A Assembly	2	R-1ALDC-6036	
2	Wheel B Assembly	2	R-1ALDC-6041	
3	Snap Ring	4	T3G106075	
4	Wheel Cover A	1	R-1ALDC-9053	
5	Socket Bolt	8	9091519	
6	Spring Lock Washer	8	9016604	
7	Plain Washer	8	9015623	
8	Wheel Cover B	1	R-1ALDC-9054	
12	Guide Roller Assembly	4	R-1ALDC-6061	
13	Socket Bolt	8	9091512	9091517
14	Spring Lock Washer	8	9016604	
15	Rubber Buffer	4	R-1ALDC-9071	
16	Nut	4	90934Z24	

9.4 Hook Block Parts

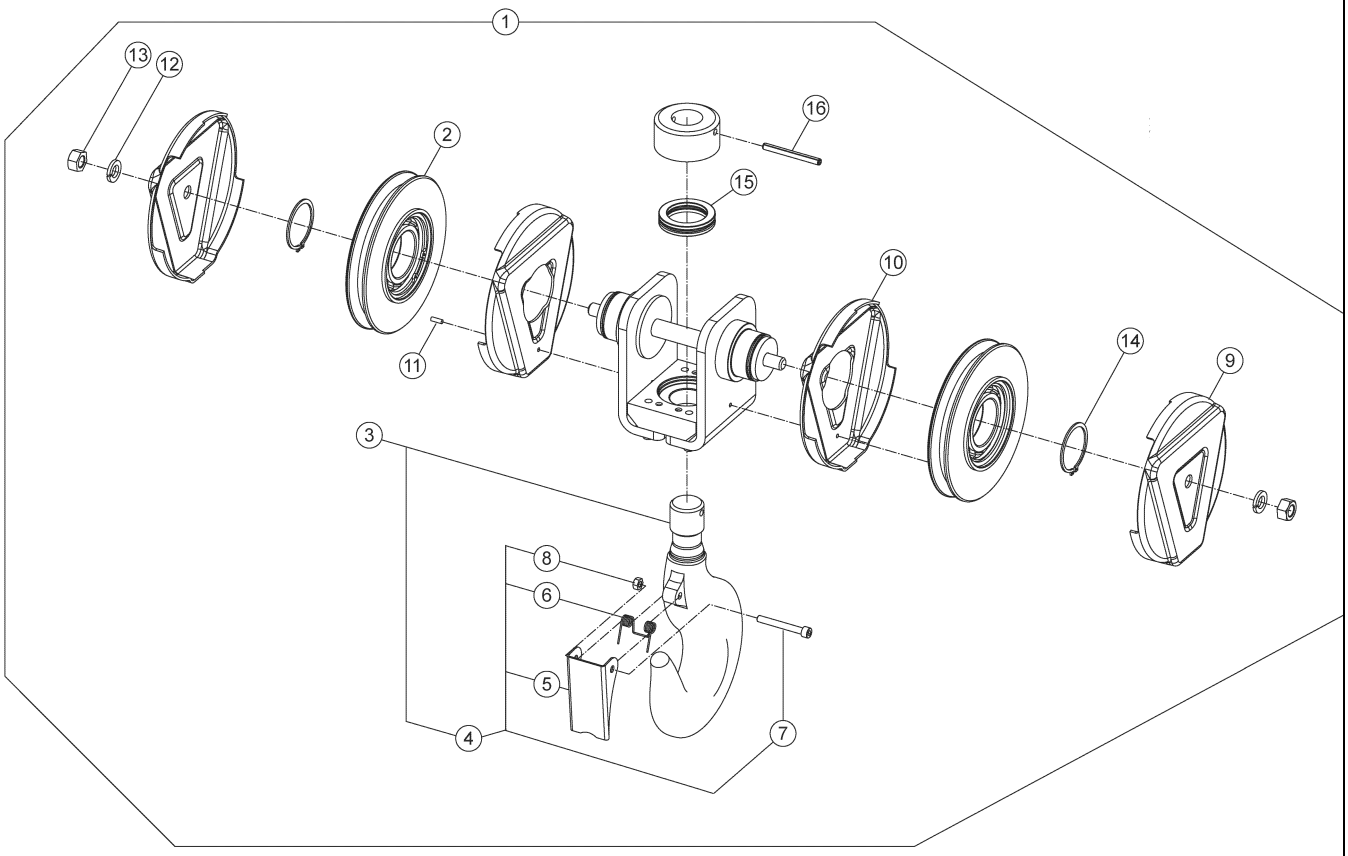

Figure 9-4 Hook Block Parts

Figure No.	Part Name	Parts Per Hoist	RYU030	RYU050
1	Hook Block Assembly	1	R-1ALEC-1001	R-1BLEC-1001
2	Sheave Assembly	2	R-1ALEC-5001	
3	Hook Assembly	1	R-1ALEC-6014	R-1BLEC-6014
4	Hook Latch Assembly	1	SR-1ALEC-6015	SR-1BLEC-6015
9	Sheave Cover A	2	R-1ALEC-9020	
10	Sheave Cover B	2	R-1ALEC-9021	
11	Spring Pin	2	CF083020	
12	Spring Lock Washer	2	9016607	
13	Nut	2	90934Z39	
14	Snap Ring	2	9047160	
15	Thrust Bearing	1	J1GS000-51108	J1GS000-51110
16	Spring Pin	1	91481173	91481174
17	Logo Label	2	80835	
18	Capacity Label	2	80833	80834

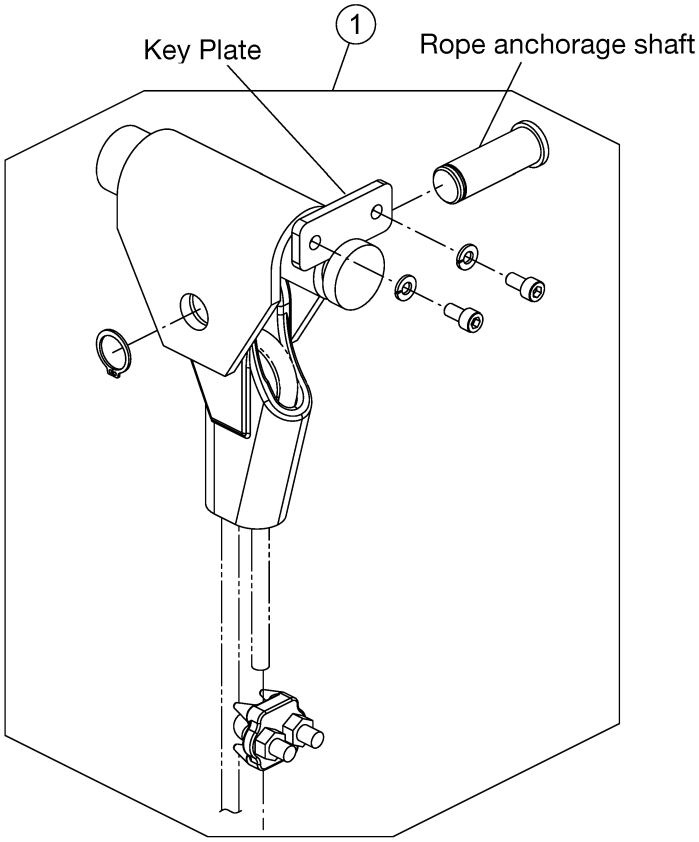

Figure 9-5 Rope Anchorage Parts

Figure No.	Part Name	Parts Per Hoist	RYU030	RYU050
1	Rope Anchorage Assembly	1	R-1ALFH-1001	

9.6 Rope Guide Parts

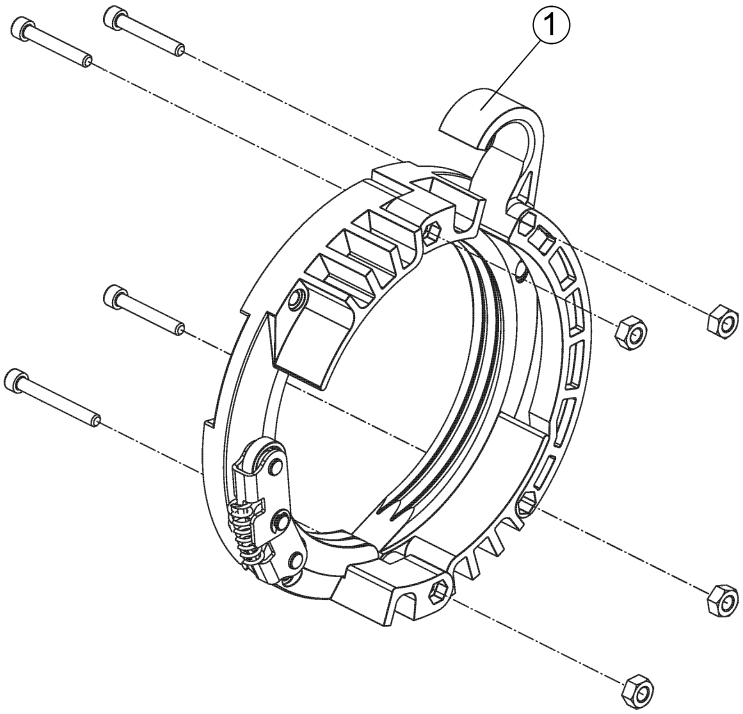

Figure 9-6 Rope Guide Parts

Figure No.	Part Name	Parts Per Hoist	RYU030	RYU050
1	Rope Guide Assembly (includes all Hardware)	1	R-1ALGH-1001	

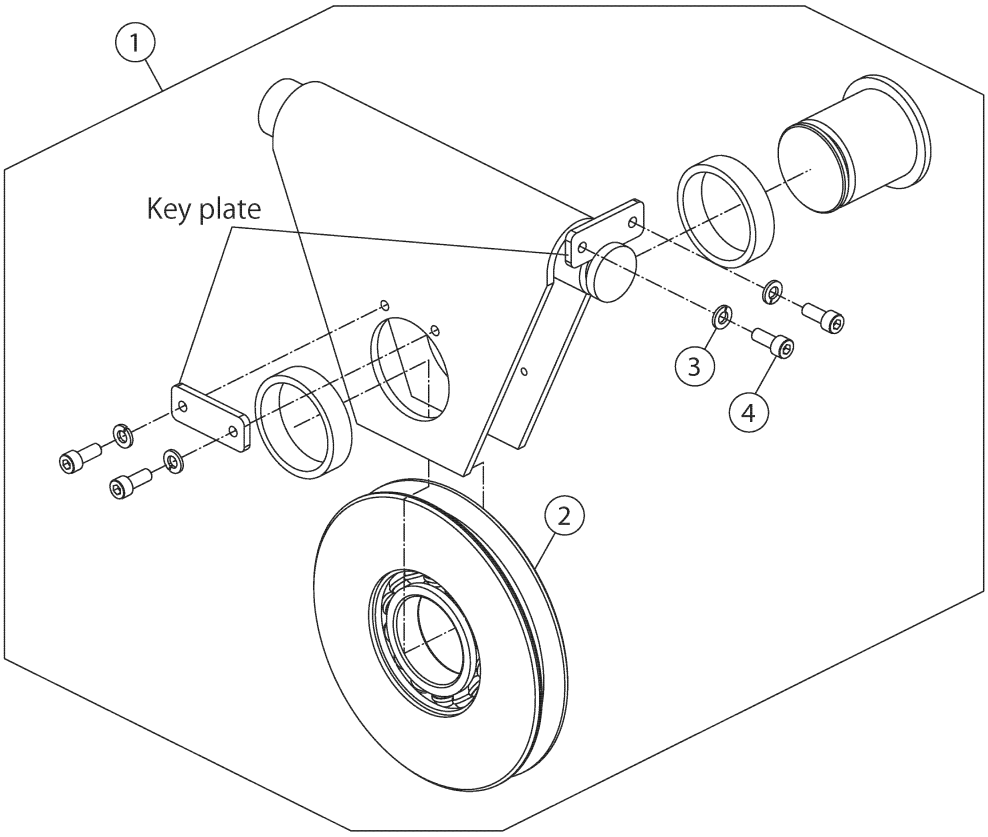

Figure 9-7 Idle Sheave Parts

Figure No.	Part Name	Parts Per Hoist	RYU030	RYU050
1	Idle Sheave Assembly	1	R-1ALHH-1001	
2	Sheave Assembly	1	R-1ALEC-5001	
3	Spring Lock Washer	4	9016604	
4	Socket Bolt	4	9091504	

9.8 Lifting Limit Switch (ULLS) Parts

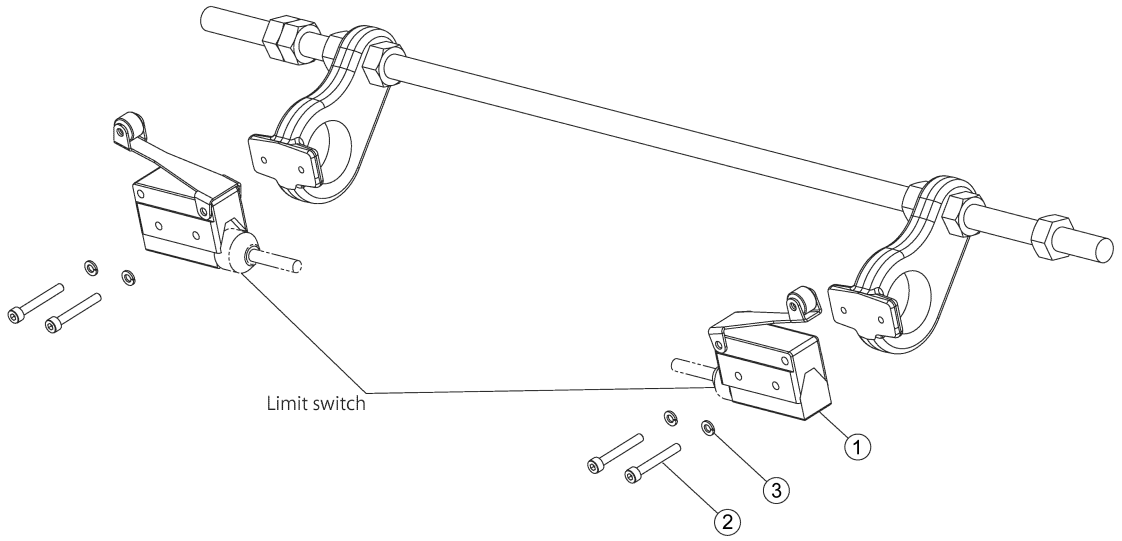

Figure 9-8 Lifting Limit Switch (ULLS) Parts

Figure No.	Part Name	Parts Per Hoist	RYU030	RYU050
1	Limit Switch	2	R-1AUJ-9001	
2	Socket Bolt	4	9091510	
3	Spring Lock Washer	4	9016602	

9.9 Block Operated Limit Switch (BLS) Parts

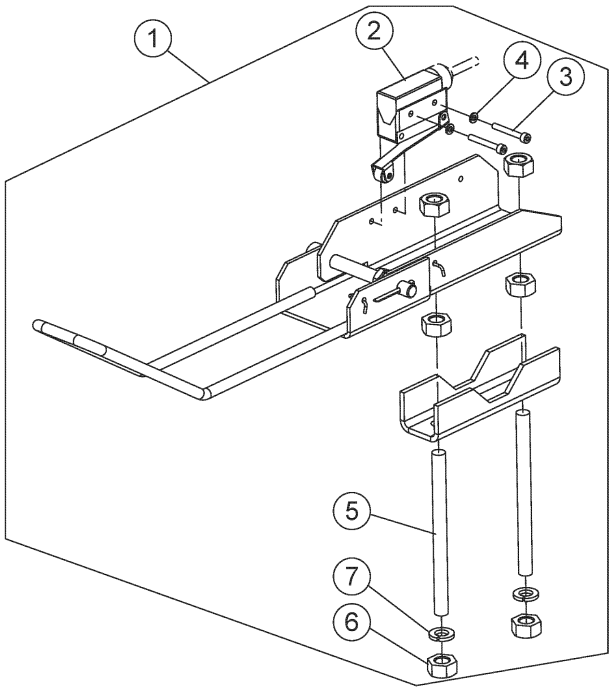

Figure 9-9 Block Operated Limit Switch (BLS) Parts

Figure No.	Part Name	Parts Per Hoist	RYU030	RYU050
1	Direct Limit Switch Assembly	1	R-1BLJH-1001	
2	Limit Switch	1	R-1ALJJ-9001	
3	Socket Bolt	2	9091510	
4	Spring Lock Washer	2	9016602	
5	Fixing Bolt	2	R-1ALJC-9008	
6	Nut	6	90934Z28	
7	Spring Lock Washer	2	9016606	

9.10 Hoist Motor Parts

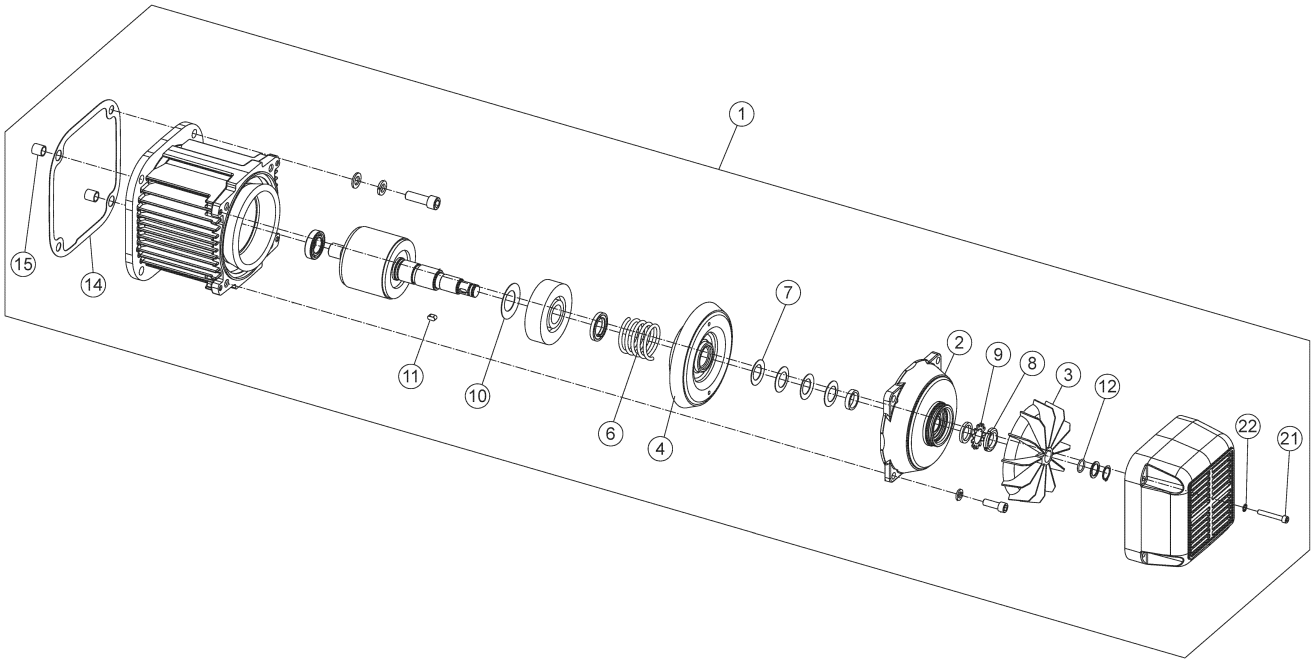

Figure 9-10 Hoist Motor Parts

9.10 Hoist Motor Parts

Figure No.	Part Name	Parts Per Hoist	RYU030	RYU050
1	Lifting Motor Assembly – 208-230V	1	R-1BLMH-1201	R-1CLMH-1201
	Lifting Motor Assembly – 415-460V	1	R-1BLMH-1401	R-1CLMH-1401
2	Motor Cover Assembly	1	R-1ALMJ-5021	R-1CLMJ-5021
3	Fan	1	R-1ALMC-9024	R-1CLMC-9024
4	Brake Drum Assembly	1	ER1ES52123	R-1CLMJ-5031
14	Packing M	1	R-1ALMC-9072	
21	Socket Bolt	4	9091515	
22	Toothed Lock Washer	4	9679711	
5	Brake Spring	1	R-1BLMC-9046	R-1CLMC-9046
6	Coned Disk Spring M	4	R-1ALMC-9047	
7	Adjusting Nut	1	R-1ALMC-9050	
8	Nut Washer	1	R-1ALMC-9051	
9	Pull Rotor Spring	1	R-1ALMC-9052	
10	Key	1	R-1ALMC-9063	
11	O-ring	1	R-1ALMC-9064	
12	Set Pin	2	R-1ALMC-9073	

9.11 Trolley Motor Parts

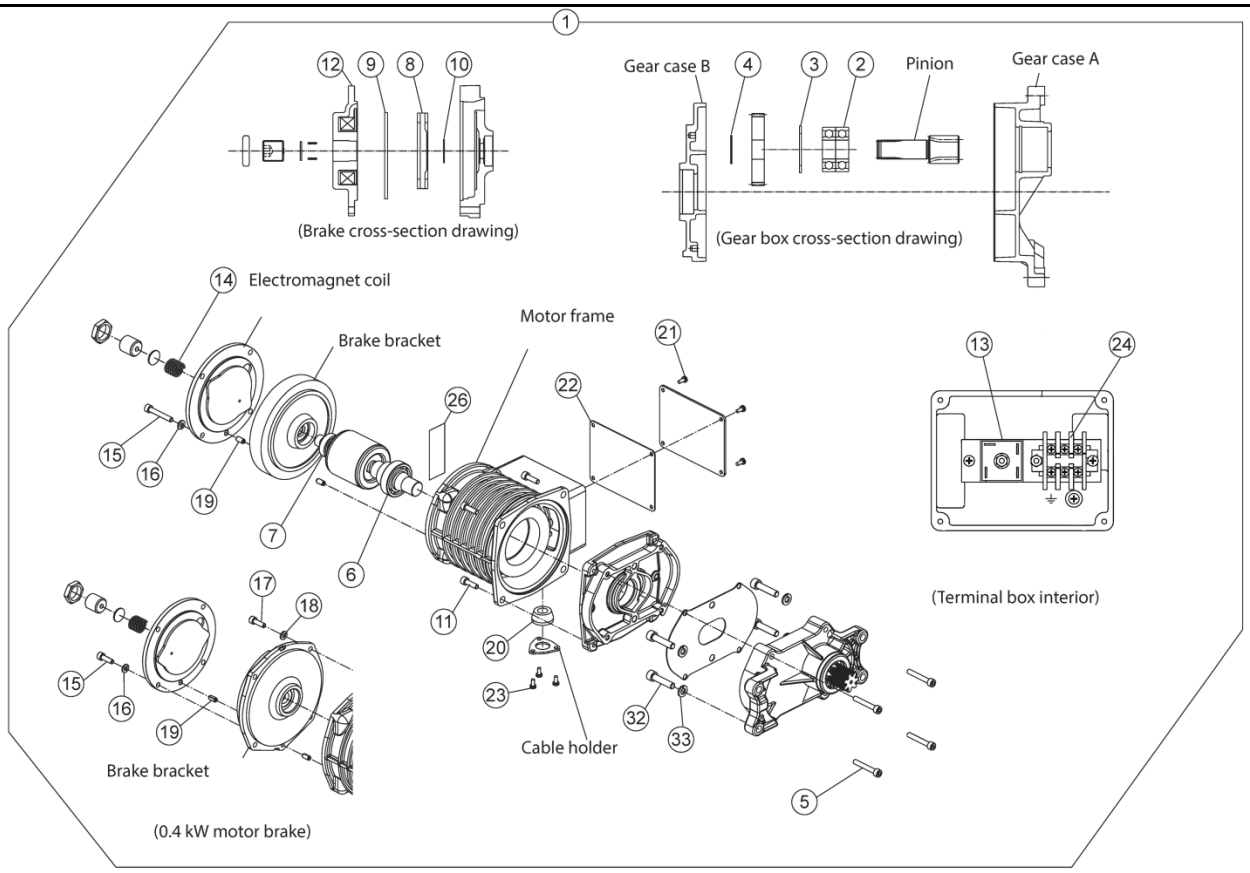

Figure 9-11 Trolley Motor Parts

9.11 Trolley Motor Parts

Figure No.	Part Name	Parts Per Hoist	RYU030	RYU050
1	Traversing Motor Assembly – 208-230V	1	R-1BLNH-1001	
	Traversing Motor Assembly – 415-460V		R-1BLNH-1101	
2	Ball Bearing	2	9000705	
3	Snap Ring	1	J1SR000-00062	
4	Snap Ring	1	9047125	
5	Socket Bolt	4	9091518	
6	Ball Bearing	1	9000602	
7	Ball Bearing	1	9001004	
8	Brake Disk	1	N6GJ0255512	
9	Armature	1	N6GJ025513	
10	Snap Ring	1	9047115	
11	Socket Bolt	4	9091502	
12	Electromagnetic Coil Assembly – 208-230V	1	R-1BLNC-5046	
	Electromagnetic Coil Assembly – 415-460V		R-1BLNC-5146	
13	Rectifier	1	R-1ALNC-9051	
14	Brake Spring	1	N6GJ040606	
15	Socket Bolt	4	9091506	
16	Spring Lock Washer	4	9016604	
17	Socket Bolt	4	9091506	
18	Spring Lock Washer	4	9016604	
19	Spring Pin	2	9148197	
20	Cable Packing 14	1	G1JE025S9704	
21	Machine Screw w/ Spring Washer	6	MS555010	
22	Terminal Cover Packing	1	G1JE025S9704	
23	Machine Screw w/ Spring Washer	3	MS555010	
24	Terminal Plate 3P	1	DKB10-XXP	
32	Socket Bolt	4	9091507	
33	Spring Lock Washer	4	9016605	

9.12 Control Panel/Box Parts

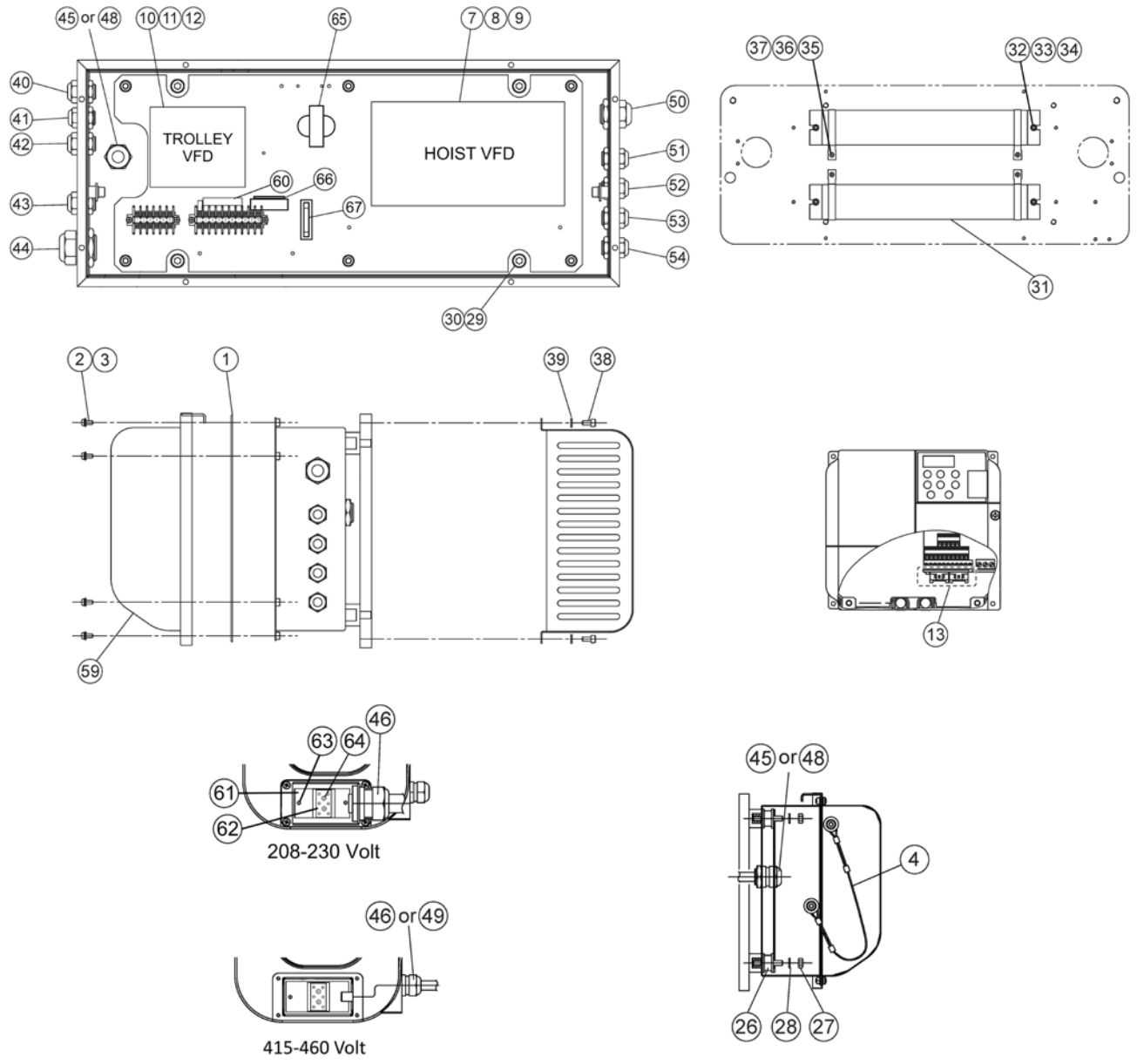

Figure 9-12 Control Panel/Box Parts

9.12 Control Panel/Box Parts

Figure No.	Part Name	Parts Per Hoist	RYU030	RYU050
1	Packing	1	R-1ALPC-9009	
2	Machine Screw w/ Spring Lock Washer	8	J1AP2-5001212	
3	Washer	8	9016507	
4	Hanger Wire	2	R-1ALPC-9012	
7	Lifting Inverter – VFD – 208-230V	1	INV675E11	INV61QE11
	Lifting Inverter – VFD – 415-460V		INV655Y11	INV61QY11
8	Round Head Screw	4	9798534	
9	Spring Lock Washer	4	9016603	
10	Traversing Inverter – VFD – 208-230V	1	INV604E43	
	Traversing Inverter – VFD – 415-460V		INV604Y43	
11	Round Head Screw – 208-230V	2	9798522	
	Round Head Screw – 415-460V	4	9798522	
12	Spring Lock Washer – 208-230V	2	9016602	
	Spring Lock Washer – 415-460V	4	9016602	
13	HBB Board	1	ECP91KB22	
26	Rubber Mount	6	R-1ALPC-9043	
27	Nut	6	90934Z24	
28	Spring Lock Washer	6	9016605	
29	Socket Bolt	4	9091509	
30	Spring Lock Washer	4	9016606	
31	Lifting Resistor – 208-230V	2	INV950E16	INV980E16
	Lifting Resistor – 415-460V	2	INV950Y16	INV980Y16
32	Socket Bolt	4	9091504	
33	Spring Lock Washer	4	9016604	
34	Large Plain Washer	4	9016504	
35	Round Head Screw	4	9798534	
36	Spring Lock Washer	4	9016603	
37	Nut	4	90934Z17	
38	Socket Bolt	4	9091504	
39	Spring Lock Washer	4	9016604	
40	Cable Gland (Traversing Motor)	1	R-1ALPC-9083	
41	Cable Gland (Option)	1	R-1ALPC-9082	
42	Cable Gland (Option)	1	R-1ALPC-9084	
43	Cable Gland – Lifting Resistor	1	R-1ALPC-9089	

9.12 Control Panel/Box Parts

Figure No.	Part Name	Parts Per Hoist	RYU030	RYU050
44	Cable Gland – Flat Cable Control 208-230V	1	FC816C	
45	Cable Gland – Lifting Motor – 208-230V Control Side	1	R-1ALPC-9088	
46	Cable Gland – Lifting Motor – 208-230V Gearbox Side		R-1ALPC-9088	
48	Cable Gland – Lifting Motor – 415-460V Control Side		R-1ALPC-9085	
49	Cable Gland – Lifting Motor – 208-230V Gearbox Side		R-1ALPC-9090	
50	Cable Gland – Power Supply – 208-230V	1	R-1ALPC-9088	
	Cable Gland – Power Supply – 415-460V		R-1ALPC-9086	
	Cable Gland – Flat Cable Power Supply – 208-230V		FC48C	
	Cable Gland – Flat Cable Power Supply 415-460V		9006392	
	Cable Gland – Flat Cable Power and Control 415-460V		FC4/8C	
51	Cable Gland – Traveling Signal	1	R-1ALPC-9084	
52	Cable Gland – Direct Limit Switch	1	R-1ALPC-9081	
53	Cable Gland – Upper Limit Switch	1	R-1ALPC-9081	
54	Cable Gland – Lower Limit Switch	1	R-1ALPC-9081	
59	Control Box Cover	1	R-1ALPH-6006	
60	IO Unit – 208-230V	1	R-1ALPC-5152	
	IO Unit – 415-460V	1	R-1ALPC-5153	
61	Terminal Block Mounting Plate	1	83347	
62	Terminal Block	1	9009125	
63	Machine Screw w/ Spring Lock Washer	2	J1AP2-5001212	
64	Machine Screw	2	9798525	
65	Transformer – 208-230V	1	R-1ALPC-6162	
	Transformer – 415-460V		R-1ALPC-6163	
66	Fuse – 208-230V	2	9006293	
	Fuse – 415-460V		9006295	
67	Fuse – Transformer Secondary	1	9006294	

This Page Intentionally Left Blank

Harrington Hoists, Inc.
401 West End Avenue
Manheim, PA 17545

www.harringtonhoists.com

Toll Free: 800-233-3010
Phone: 717-665-2000
Fax: 717-665-2861

© Harrington Hoists, Inc.,
All Rights Reserved

RYOM-ENG