Air Chain Hoist

Operating, Maintenance & Parts Manual

Yale® MODEL SAL

Capacities

250 lbs (113 kg) 300 lbs (136 kg)
500 lbs (226 kg) 600 lbs (272 kg)
1000 lbs (453 kg)

Follow all instructions and warnings for inspecting, maintaining and operating this hoist.

The use of any hoist presents some risk of personal injury or property damage. That risk is greatly increased if proper instructions and warnings are not followed. Before using this hoist, each operator should become thoroughly familiar with all warnings, instructions, and recommendations in this manual. **Retain this manual for future reference and use.**

Forward this manual to the hoist operator.
Failure to operate the equipment as directed in the manual may cause injury.

Should you have any questions or have problems with this product, please call Product Standards and Service at 1-800-634-4647.

Before using the hoist, fill in the information below. Model and serial numbers are stamped into the aluminum hoist housing.

Model Number _____

Serial Number _____

Purchase Date _____

Yale® HOISTS

414 WEST BROADWAY AVENUE
MUSKEGON, MICHIGAN 49443-0769

HOOSIER CRANE SERVICE COMPANY

Note: When ordering parts, always furnish Rated Load and Serial Number of hoist on which the parts are to be used.
For the location of the nearest Repair Station, see the list located on the inside front cover.

LIMITATION OF WARRANTIES, REMEDIES AND DAMAGES

THE WARRANTY STATED BELOW IS GIVEN IN PLACE OF ALL OTHER WARRANTIES, EXPRESS OR IMPLIED, OF MERCHANTABILITY, FITNESS FOR A PARTICULAR PURPOSE, OR OTHERWISE, NO PROMISE OR AFFIRMATION OF FACT MADE BY ANY AGENT OR REPRESENTATIVE OF SELLER SHALL CONSTITUTE A WARRANTY BY SELLER OR GIVE RISE TO ANY LIABILITY OR OBLIGATION.

Seller warrants that on the date of delivery to carrier the goods are free from defects in workmanship and materials.

SELLER'S SOLE OBLIGATION IN THE EVENT OF BREACH OF WARRANTY OR CONTRACT OR FOR NEGLIGENCE OR OTHERWISE WITH RESPECT TO GOODS SOLD SHALL BE EXCLUSIVELY LIMITED TO REPAIR OR REPLACEMENT, F.O.B. SELLER'S POINT OF SHIPMENT, OF ANY PARTS WHICH SELLER DETERMINES TO HAVE BEEN DEFECTIVE or if Seller determines that such repair or replacement is not feasible, to a refund of the purchase price upon return of the goods to Seller.

Any action against Seller for breach of warranty, negligence or otherwise, must be commenced within one year after such cause of action occurs.

NO CLAIM AGAINST SELLER FOR ANY DEFECT IN THE GOODS SHALL BE VALID OR ENFORCEABLE UNLESS BUYER'S WRITTEN NOTICE THEREOF IS RECEIVED BY SELLER WITHIN ONE YEAR FROM THE DATE OF SHIPMENT. Seller shall not be liable for any damage, injury or loss arising out of the use of the goods if, prior to such damage, injury or loss, such goods are (1) damaged or misused following Seller's delivery to carrier; (2) not maintained, inspected, or used in compliance with applicable law and Seller's written instructions and recommendations; or (3) installed, repaired, altered or modified without compliance with such law, instructions or recommendations.

UNDER NO CIRCUMSTANCES SHALL SELLER BE LIABLE FOR INCIDENTAL OR CONSEQUENTIAL DAMAGES AS THOSE TERMS ARE DEFINED IN SECTION 2-715 OF THE UNIFORM COMMERCIAL CODE.

INDEMNIFICATION AND SAFE OPERATION

Buyer shall comply with and require its employees to comply with directions set forth in instructions and manuals furnished by Seller and shall use and require its employees to follow such instructions and manuals and to use reasonable care in the use and maintenance of the goods. Buyer shall not remove or permit anyone to remove any warning or instruction signs on the goods. In the event of personal injury or damage to property or business arising from the use of the goods, Buyer shall within 48 hours thereafter give Seller written notice of such injury or damage. Buyer shall cooperate with Seller in investigating any such injury or damage and in the defense of any claims arising therefrom.

If Buyer fails to comply with this section or if any injury or damage is caused, in whole or in part, by Buyer's failure to comply with applicable federal or state safety requirements, Buyer shall indemnify and hold Seller harmless against any claims, loss or expense for injury or damage arising from the use of the goods.

⚠ WARNING

Alterations or modifications of equipment and use of non-factory repair parts can lead to dangerous operation and injury.

TO AVOID INJURY:

- Do not alter or modify equipment.
- Do use only factory replacement parts.

HOISTCRANE SERVICE COMPANY

Yale® HOISTS
414 WEST BROADWAY AVENUE
MUSKEGON, MICHIGAN 49443-0769
1-800-805-2962 • Fax: 1-800-742-9270

Printed in U.S.A.

Parts for your hoist are available from your local authorixed repair station. For the location of your nearest repair station, write or phone:

IN USA

MICHIGAN
LIFT-TECH INTERNATIONAL
414 West Broadway Avenue
P.O. Box 769
Muskegon, MI 49443-0769
800/742-9269 or 800/742-9270

YALE HOISTS
414 West Broadway Avenue
P.O. Box 769
Muskegon, MI 49443-0769
800/742-9269 or 800/742-9270

HOOSIER CRANE SERVICE COMPANY

SAFETY PRECAUTIONS

Each Yale Model SAL Air Hoist is built in accordance with the specifications contained herein and at the time of manufacture complies with our interpretation of applicable sections of *American Society of Mechanical Engineers Code (ASME) Performance Standard for Air Chain Hoists HST-5M, Overhead Hoists B30.16 and the Occupational Safety and Health Act (OSHA). Check each installation for compliance with the application, operation and maintenance sections of these articles.

*Copies of this Standard can be obtained from ASME Order Department, 22 Law Drive, Box 2300, Fairfield, NJ 07007-2300, U.S.A.

⚠ WARNING

Improper operation of a hoist can create a potentially hazardous situation which, if not avoided, could result in death or serious injury. To avoid such a potentially hazardous situation, THE OPERATOR SHALL:

1. **NOT** operate a damaged, malfunctioning or unusually performing hoist.
2. **NOT** operate the hoist until you have thoroughly read and understood this Operating, Maintenance and Parts Manual.
3. **NOT** operate a hoist which has been modified without the manufacturer's approval or without certification that it is in conformity with ANSI/AMSE B30 volumes.
4. **NOT** lift more than rated load for the hoist.
5. **NOT** use hoist with twisted, kinked, damaged, or worn load chain.
6. **NOT** use the hoist to lift, support, or transport people.
7. **NOT** lift loads over people.
8. **NOT** operate a hoist unless all persons are and remain clear of the supported load.
9. **NOT** operate unless load is centered under hoist.
10. **NOT** attempt to lengthen the load chain or repair damaged load chain.
11. Protect the hoist's load chain from weld splatter or other damaging contaminants.
12. **NOT** operate hoist when it is restricted from forming a straight line from hook to hook in the direction of loading.
13. **NOT** use load chain as a sling, or wrap chain around load.
14. **NOT** apply the load to the tip of the hook or to the hook latch.
15. **NOT** apply load unless load chain is properly seated in the chain sprocket(s).
16. **NOT** apply load if bearing prevents equal loading on all load supporting chains.
17. **NOT** operate beyond the limits of the load chain travel.
18. **NOT** leave load supported by the hoist unattended unless specific precautions have been taken.
19. **NOT** allow the load chain or hook to be used as an electrical or welding ground.
20. **NOT** allow the load chain or hook to be touched by a live welding electrode.
21. **NOT** remove or obscure the warnings on the hoist.
22. **NOT** operate a hoist on which the safety placards or decals are missing or illegible.
23. **NOT** operate a hoist unless it has been securely attached to a suitable support.
24. **NOT** operate a hoist unless load slings or other approved single attachments are properly sized and seated in the hook saddle.
25. Take up slack carefully - make sure load is balanced and load holding action is secure before continuing.
26. Shut down a hoist that malfunctions or performs unusually and report such malfunction.
27. Make sure hoist limit devices function properly.
28. Warn personnel of an approaching load.

⚠ WARNING

Improper operation of a hoist can create a potentially hazardous situation which, if not avoided, could result in minor or moderate injury. To avoid such a potentially hazardous situation, THE OPERATOR SHALL:

1. Maintain firm footing or be otherwise secured when operating the hoist.
2. Check brake function by tensioning the hoist prior to each lift operation.
3. Use hook latches. Latches are to retain slings, chains, etc. under slack conditions only.
4. Make sure the hook latches are closed and not supporting any parts of the load.
5. Make sure the load is free to move and will clear all obstructions.
6. Avoid swinging the load or hook.
7. Make sure hook travel is in the same direction as shown on the controls.
8. Inspect the hoist regularly, replace damaged or worn parts, and keep appropriate records of maintenance.
9. Use Model SAL recommended parts when repairing the unit.
10. Lubricate load chain as recommended in this manual.
11. **NOT** use the hoist's overload limiting clutch to measure load.
12. **NOT** use limit devices as routine operating stops. They are emergency devices only.
13. **NOT** allow your attention to be diverted from operating the hoist.
14. **NOT** allow the hoist to be subjected to sharp contact with other hoists, structures, or objects through misuse.
15. **NOT** adjust or repair the hoist unless qualified to perform such adjustments or repairs.

HOOSIER CRANE SERVICE COMPANY

HOIST SAFETY IS UP TO YOU...

⚠ WARNING –DO NOT LIFT MORE THAN RATED LOAD.

1 CHOOSE THE RIGHT HOIST FOR THE JOB...

Choose a hoist with a capacity for the job. Know the capacities of your hoists and the weight of your loads. Thn match them.

The application, the size and type of load, the attachments to be used and the period of use must also be taken into consideration in selecting the right hoist for the job.

Remember the hoist was designed to ease our burden and carelessness not only endangers the operator, but in many cases, a valuable load.

⚠ WARNING
– DO NOT OPERATE DAMAGED OR MALFUNCTIONING HOIST.
– DO NOT OPERATE WITH TWISTED, KINKED OR DAMAGED CHAIN.

2 INSPECT

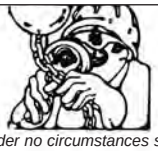

All hoists should be visually inspected before use, in addition to regular, periodic maintenance inspections.
Inspect hoists for operational warning notices and legibility.
Deficiencies should be noted and brought to the attention of supervisors. Be sure defective hoists are tagged and taken out of service until repairs are made.

Under no circumstances should you operate a malfunctioning hoist.
Check chain for gouged, twisted, distorted Links and foreign material. Do not operate hoists with twisted, kinked or damaged chain.

Load chain should be properly lubricated. Hooks that are bent, worn or whose openings are enlarged beyond normal t hroat opening should not be used. If latch does not engage throat opening of hook, hoist should be taken out service.

⚠ WARNING
– DO NOT PULL AT AN ANGLE. BE SURE HOIST AND LOAD ARE IN A STRAIGHT LINE.
– DO NOT USE LOAD CHAIN AS A SLING.

3 USE HOIST PROPERLY

Be sure hoist is solidly held in the uppermost part of the support hook arc.

Be sure hoist and load are in a straight line. Do not pull at an angle.

Be sure load is hooked securely. Do not tip load the hook. Do not load hook latch. Hook latch is to prevent detachment of load under slack chain conditions only.

Do not use load chain as a sling. Such usage damages the chain and lower hook.

Do not operate with hoist head resting against any object. Lift the load gently. Do not jerk it.

⚠ WARNING – DO NOT LIFT PEOPLE OR LOADS OVER PEOPLE.

4 LIFT PROPERLY

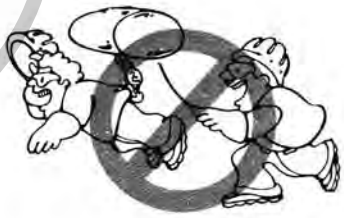

Do not lift co-workers with a hoist.
Make sure everyone is clear of the load when you lift.
Do not remove or obscure operational warning notices.

5 MAINTAIN PROPERLY

CLEANING: Hoists should be kept clean and free of dust, dirt, moisture, etc., which will in any way affect the operation or safety of the equipment.
LUBRICATION: Chain should be properly lubricated.
AFTER REPAIRS: Carefully operate the hoist before returning it to full service.

VIOLATION OF ANY OF THESE WARNINGS LISTED MAY RESULT SERIOUS PERSONAL INJURY TO THE OPERATOR OR NEARBY PERSONNEL BY RELEASED LOAD OR BROKEN HOIST COMPONENTS.

BOSSER CRANE SERVICE COMPANY

SPECIFICATIONS

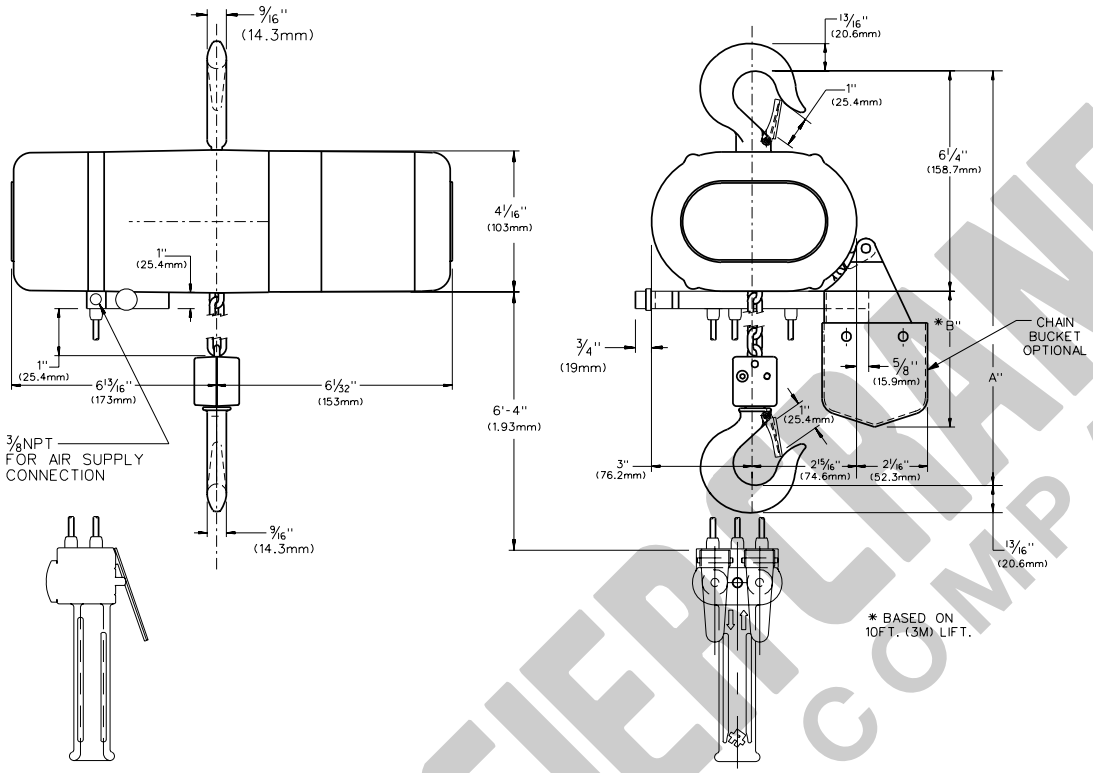

Product Code	Capacity Lbs. (kg.)	Full Load Hoist Speed fpm (mpm)	Full Load Lowering Speed	DIMENSIONS IN. (mm)		Number of Load Chains	Shipping Weight LBS. (kg.)
				A IN. (mm)	B IN. (mm)		
250-10TH31S1	250 (113)	33 (10.0)	68 (20.7)	$10^{7}/_{8}$ (276)	$3^{7}/_{8}$ (98)	1	30 (13.6)
300-10TH31S1	300 (136)	30 (9.1)	62 (18.9)	$10^{7}/_{8}$ (276)	$3^{7}/_{8}$ (98)	1	30 (13.6)
500-10TH21S1	500 (226)	20 (6.1)	57 (17.4)	$10^{7}/_{8}$ (276)	$3^{7}/_{8}$ (98)	1	30 (13.6)
500-10TH16S2	500 (226)	16 (4.8)	52 (15.8)	$11^{15}/_{16}$ (303)	$5^{3}/_{4}$ (146)	2	34 (15.4)
600-10TH16S2	600 (272)	15 (4.6)	47 (14.3)	$11^{15}/_{16}$ (303)	$5^{3}/_{4}$ (146)	2	34 (15.4)
1000-10TH11S2	1000 (453)	10 (3.0)	28 (8.5)	$11^{15}/_{16}$ (303)	$5^{3}/_{4}$ (146)	2	34 (15.4)

- Standard Protector™ overload device.
- 10-pocket, oblique lay liftwheel provides longer chain life.
- Epoxy powder coat finish.
- Variable flow, two lever pendant for precise load spotting.
- Threaded external exhaust for piping away exhaust in clean room or painting applications.
- Small, compact design for commercial & industrial applications.
- Industrial duty air motor for tough applications.
- Gear train is lifetime-lubricated with non-oxidizing grease.
- Hardened forged steel, latch-type lower hook rotates 360°.
- Hardened forged steel, rigid latch-type upper hook.
- Rugged cast aluminum alloy hoist frame.
- Alloy load chain.
- Lifetime warranty against defects in materials and workmanship.
- Made in USA.

⚠ WARNING

Overloading and improper use can result in injury.

TO AVOID INJURY:

- Do not exceed working load limit, load rating or capacity.
- Do not use to lift people or loads over people.
- Use only Yale® alloy chain for overhead lifting.
- Read and follow all instructions.

HOOSIER CRANE SERVICE COMPANY

GENERAL INFORMATION

The Yale Model SAL Air Hoists are precision, air operated link type chain hoists that are available in five rated capacities: 250, 300, 500, 600 and 1000 pounds (113, 136, 226, 272 and 453 kg.). Each unit is supplied with a pendant throttle control station for controlling the lifting and lowering speeds and an upper latch type hook for suspending the hoist from a fixed support or trolley.

The basic design of the hoist consists of a lightweight, rugged aluminum alloy frame which houses a vane type air motor, hardened steel gears, hardened steel oblique lay liftwheel, a disc type load brake and a muffler for quiet operation. The gearing includes a Protector™ that is a factory set clutch that prevents lifting dangerous overloads. The lifting medium is alloy, hardened steel link type chain and it connects the lower hook to the liftwheel. The hoists with rated capacity of 250, 300 and 500 pounds (113, 136 and 226 kg.) are single reeved units whereas the units with rated capacities of 500, 600 and 1000 pounds (226, 272 and 453 kg.) are double reeved units. The standard lift of each capacity is 10 feet (3 meters) and units with longer lifts can be provided on a special, per order basis.

The pendant throttle control is suspended from the hoist frame so that the control levers are approximately four feet (1.2 meters) above the lower hook when it is in its lowest position. A unique, three tube hose is provided between the throttle control and the hoist head to control the vane type air motor and the lifting speed. The three tube hose includes an internal, aircraft type wire rope to eliminate strain on the hose connections at the throttle control and at the hoist head.

A quick connect type fitting is provided at the air inlet to easily attach the hoist to the external air supply (refer to INSTALLATION on page 3). At installation, there are no adjustments to be made. Just connect the hoist to the external air supply and the SAL Air Hoist is ready for operation.

REPAIR/REPLACEMENT POLICY

All Yale Model SAL Air Hoists are inspected and performance tested prior to shipment. If any properly maintained hoist develops a performance problem, due to a material or workmanship defect, as verified by Yale® repair or replacement of the unit will be made to the original purchaser without charge. This repair/replacement policy applies only to hoists installed, maintained and operated as outlined in this manual, and specifically excludes hoists subject to normal wear, abuse, improper installation, improper or inadequate maintenance, hostile environmental effects and unauthorized repairs/modifications.

⚠ WARNING

Alterations or modification of hoist and use of non-original repair parts can lead to dangerous operation and injury.

TO AVOID INJURY:

- Do not alter or modify equipment.
- Do use only original replacement parts.

We reserve the right to change materials or design if, in our opinion, such changes will improve our product. Abuse, repair by an unauthorized person, or use of non-Yale® replacement parts voids the guarantee and could lead to dangerous operation. For full Terms of Sale, see Sales Order Acknowledgment. Also, refer to the back cover for Limitations of Warranties, Remedies and Damages, and Indemnification and Safe Operation.

ACCESSORIES

Chain Container

This accessory item (Figure 1) is used to hold the slack chain and it is supplied with mounting hardware and instructions. Chain containers are recommended for those applications where slack chain will interfere with the load or drag on the floor as may more often be the case with the (500, 600 and 1000 lbs. (226, 272 and 453 kg., Double Reeved units). Chain containers are shipped separately and can be furnished for units already in service.

Figure 1
Chain Container

Series 632 Trolley

This lightweight, yet rugged, manual push type trolley (Figure 2) is designed to fit a wide range of monorail beams and negotiate tight curves. Provides mobility for your Model SAL Hoist.

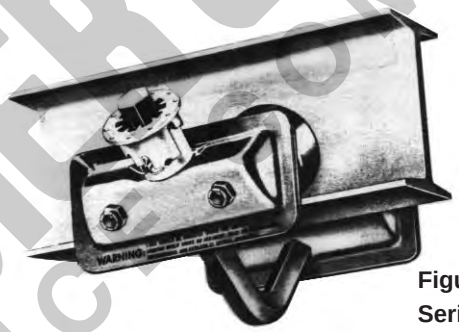

Figure 2
Series 632 Trolley

Recoil Air Hose

Self-Storing Air Hose with Fittings

Catalog Number IN. (mm)	Hose Size (ID)	X	Working Length FT. (m)	Fittings Each End
901621	1/2 (12.7)	X	15 (4.6)	3/8 NPTF Male Swivel Fittings
901622	1/2 (12.7)	X	25 (7.6)	

Nylon coated cable with eyebolt fittings each end for supporting recoil air hose (supports by others).

Catalog Number	Length
901629	25 ft. (7.6m)

Filter-Lubricator Units

Catalog Number	Inlet/Outlet Size (in.)	Bowl Size	Shipping Wt. Lbs. (kg.)
902960	3/8	11 oz.	6 (2.7 kg.)
902961	1/2	11 oz.	7 (3.2 kg.)

Filter-Regulator-Lubricator Units

Catalog Number	Inlet/Outlet Size (in.)	Bowl Size	Shipping Wt. Lbs. (kg.)
902966	3/8	11 oz.	14 (6.4 kg.)
902967	1/2	11 oz.	15 (6.8 kg.)

HOOSIER CRANE SERVICE COMPANY

INSTALLATION

UNPACKING

After opening the carton, carefully inspect the hoist frame, control tube, hooks and pendant throttle control for damage that may have occurred during shipment. If there is damage, refer to the packing slip envelope.

⚠ WARNING

Operating the hoist with obvious external damage may cause load to drop and that may result in personal injury and/or property damage.

TO AVOID INJURY:

Carefully check hoist for external damage prior to installation.

All hoists are completely assembled, lubricated and load tested prior to shipment. To place the hoist in service, attach the upper hook to a support or trolley that has sufficient strength to support the hoist and several times the rated capacity of the hoist. If in doubt, consult a registered engineer and local building code.

Be certain that the upper hook is attached to the support so that the support is firmly seated in the center of hook bowl, the latch closes and contacts the tip of the hook, and that the latch does not bear against the support.

⚠ WARNING

Suspending the hoist from an inadequate support may allow the hoist and load to fall and cause injury and/or property damage.

TO AVOID INJURY:

Make sure the structure has sufficient strength to hold several times the hoist and its rated load. Using the upper hook, hang the hoist from the support. **Be sure the hoist is solidly held in the uppermost part of the hook arc and the latch is tightly against the tip of the hook.**

AIR SUPPLY SYSTEM

Connect hoist to a filtered and lubricated air source using a 1/2" (12.7 mm.) I.D. hose (see Figure 3). Do not use smaller diameter hose, since it will restrict air flow and reduce hoist performance. If the hoist is suspended from a trolley, provide sufficient hose to reach from the source to the farthest point of trolley travel. Hose Trolleys are recommended to keep the hose up and out of the way.

A filter and lubricator (see Figure 3) **must** be installed between the air source and the air hose leading to the hoist. These keep the air flowing free from dirt and add lubricant to the air so internal parts of the motor are constantly lubricated. Use a good grade of oil with a viscosity of 180 SSU at 100 °F., air powered tool oil or SAE 0W machine oil. Such oil can be obtained from Yale®.

Figure 3 Air Filter and Lubricator Unit

The recommended operating air pressure for the hoist is 90 psig. When line pressure exceeds 100 psig (at the hoist when it is lifting rated load), it is recommended that a pressure regulator be provided in the air supply line to keep the pressure at 90 psig. Although there is a wide range of pressures within which the hoist will operate, motor efficiency decreases as the air pressure drops (refer to the following chart).

Hoist Capacity	250 lbs. (113 Kg.) (Single Reeved)		300 lbs. (136 Kg.) (Single Reeved)		500 lbs. (226 Kg.) (Single Reeved)	
Air Pressure (PSIG)	Up FPM (MPM)	Down FPM (MPM) Max.	Up FPM (MPM)	Down FPM (MPM) Max.	Up FPM (MPM)	Down FPM (MPM) Max.
60	22 (6.7)	46.2 (14.1)	19.1 (5.8)	40.1 (12.2)	11.1 (3.4)	41.6 (12.7)
70	27.2 (8.3)	57.1 (17.4)	23.9 (7.3)	50.2 (15.3)	14.8 (4.5)	53.7 (16.4)
80	29.6 (9.0)	62.2 (19.0)	26.7 (8.1)	56.1 (17.1)	17.3 (5.3)	57.1 (17.4)
90	32.5 (9.9)	68.3 (20.8)	29.6 (9.0)	62.2 (19.0)	19.5 (5.9)	56.6 (17.3)

Hoist Capacity	500 lbs. (226 Kg.) (Double Reeved)		600 lbs. (272 Kg.) (Double Reeved)		1000 lbs. (453 Kg.) (Double Reeved)	
Air Pressure (PSIG)	Up FPM (MPM)	Down FPM (MPM) Max.	Up FPM (MPM)	Down FPM (MPM) Max.	Up FPM (MPM)	Down FPM (MPM) Max.
60	11 (3.4)	35.2 (10.7)	9.6 (3.0)	30.7 (9.4)	5.6 (1.7)	20.8 (6.3)
70	13.6 (4.1)	43.5 (13.3)	12 (3.7)	38.4 (11.7)	7.4 (2.3)	26.9 (8.2)
80	14.8 (4.5)	47.4 (14.4)	13.4 (4.1)	42.9 (13.1)	8.7 (2.7)	28.6 (8.7)
90	16.3 (5.0)	52.2 (15.9)	14.8 (4.5)	47.4 (14.4)	9.8 (3.0)	28.3 (8.6)

On the (500, 600 and 1000 Lbs., 226, 272 and 453 Kg., Double Reeved units), cut and discard the ties used to hold the two strands of chain together. With no load on the lower hook, depress the **UP** (↑) lever in the pendant throttle control and raise the lower hook until it is about 2 feet (0.61 M) below the bottom of the hoist. Check both strands of chains for twists. Twists occur if the lower hook block has been capsized between the strands of chain during packing, shipment and/or handling. Reverse the capsize to remove twists.

CHAIN CONTAINER

If the chain container is to be used, attach it to the hoist per the instructions provided.

OPERATING INSTRUCTIONS

The hoist is equipped with a Protector™ that is designed to allow the first gear to slip when it is attempted to lift an excessive overload. An overload is indicated when the hoist speed slows down, it raises the load in a jerky manner or if it will not lift the load at all. In addition, some clutching noise may be heard. Should this occur, immediately release the **UP** (↑) lever to stop the operation of the hoist and reduce the load to the rated capacity of the hoist. When the excessive load is removed, normal operation of the hoist is automatically restored.

CAUTION: The Protector™ is susceptible to overheating and wear when slipped for extended periods. Under no circumstances should the Protector™ be allowed to slip for more than a few seconds.

Due to the above, the hoist is not recommended for use in any application where there is a possibility of adding to an already suspended load to the point of overload. This includes dumbwaiter installations, containers that are loaded in mid-air, etc. Also, if the hoist is used at unusual extremes of ambient temperatures (above 150° F., 65° C., or below 15° F., -9° C.), changes in lubricant properties may permit the hoist to raise larger loads than under operating temperatures and could present possibility of property damage or injury. Hoist operation is controlled by depressing the pendant throttle control levers. Depressing the **UP** (↑) lever will move the lower hook towards the hoist and depressing the **DOWN** (↓) lever will move the lower hook away from the hoist. The speed of lifting and lowering can be varied by the distance the lever is depressed. To stop lifting and lowering, release the lever. The up and down levers are momentary type and the hoist will operate in the selected direction as long as the lever is held in the depressed direction. Release the lever and the hoist will stop.

INDUSTRIAL SERVICE COMPANY

1. When preparing to lift a load, be sure the attachments to the lower hook are firmly seated in the hook saddle. Avoid off center loading of any kind, especially loading the tip of the hook or latch.

2. When lifting, raise the load only enough to clear the floor or support and check to be sure that the attachments are firmly seated. Continue to lift only after you are assured the load is free of all obstructions.

3. Do not load the hoist beyond the rated capacity as shown on the brake end cover. Overloading can cause immediate failure of some load-carrying parts or create a defect causing subsequent failure at less than rated capacity. When in doubt, use the next larger capacity hoist.

4. Do not use this or any other overhead materials handling equipment for lifting persons.

5. Stand clear of all loads and avoid moving loads over heads of other personnel. Warn personnel of your intention to move a load into their area.

6. Do not leave the load suspended in air unattended.

7. Permit only qualified personnel to operate this hoist.

8. Do not wrap the load chain around the load and hook onto itself as a choker chain. Doing so will result in:
   - The loss of the swiveling effect of the hook which could cause twisted chain and jammed liftwheel.
   - The chain could be damaged at the hook.

9. On the 500, 600 and 1000 pound (226, 272 and 453 Kg.) double reeved units, check for twists in the load chain. A twist can occur if the lower hook block has been capsized between the strands of chain. Reverse the capsize to remove twist.

10. Do not allow the load to bear against the hook latch. The latch is to help maintain the hook in position while the chain is slack before taking up the slack chain.

⚠ WARNING

Allowing the load to bear against the hook latch and/or hook tip can result in loss of load.

TO AVOID INJURY:

Do not allow a load to bear against the hook latch and/or the hook tip. Apply load to hook bowl or saddle only.

11. Take up slack load chain carefully and start load easily to avoid shock and jerking of the chain. If there is any evidence of overloading, immediately lower the load and remove the excess load.

12. Do not allow the load to swing or twist while hoisting.

13. Never operate the hoist when flammable materials or vapors are present. Contact between steel parts may produce sparks that in turn can cause a fire or explosion.

14. STAY ALERT! Watch what you are doing and use common sense. Do not use the hoist when you are tired, distracted or under the influence of drugs, alcohol or medication causing diminished control.

⚠ WARNING

TO AVOID INJURY:

- DO NOT Lift more than rated load.
- DO NOT Operate with twisted, kinked or damaged chain.
- DO NOT Operate damaged or malfunctioning hoist.
- DO NOT Lift people or loads over people.
- DO NOT Operate hoist when load is not centered under hoist.
- DO NOT Permit the lower hook block to contact hoist frame or chain container.
- DO Replace damaged or malfunctioning hook latch.
- DO Keep load chain well oiled.
- DO Read and understand this manual and all warnings on the hoist.

MAINTENANCE

To maintain continuous and satisfactory operation, a regular inspection procedure must be initiated so that worn or damaged parts can be replaced before they become unsafe. The intervals of inspection must be determined by the individual application and are based upon the type of service to which the hoist will be subjected. The inspection of hoists is divided into two general classifications designated as “frequent” and “periodic”.

Frequent Inspections

These inspections are usually visual examinations by the operator or other designated personnel. Frequent inspections are to be performed daily or monthly and shall include the following items:

a. Operate the hoist, with no load, and check for visual signs or abnormal noises which could indicate a potential problem - daily.
b. Brake for evidence of slippage - daily.
c. Chain for lubricant, wear, damaged links or foreign material - daily (see below).
d. Hooks for damage, cracks, twist, latch engagement and latch operation - daily (see below).

Any deficiencies must be corrected before the hoist is returned to service.

Periodic Inspections

These are visual inspections by an appointed person who records apparent external conditions to provide a basis for continuing evaluation. Periodic inspections are to be performed semi-annually and they should include the following:

a. All items listed under frequent inspections.
b. External evidence of loose screws.
c. External evidence of worn, corroded, cracked or distorted hook block, gears, bearings, chain stop and hook retainer.
d. External evidence of damage or excessive wear of the liftwheel or sheave (double reeved unit). Widening and deepening of pockets may cause chain to lift-up in the pockets and cause binding between liftwheel and chain guide or between lower sheave and hook block. Check chain guide for wear or burring where the chain enters the hoist. Severely worn or damaged parts should be replaced.
e. External evidence of excessive wear of brake parts - see page 7.

HOUSELIFT CRANE SERVICE COMPANY

f. Check the control station levers to make sure they operate freely and spring back when released.
g. Check air supply hose and control hose for kinks, cuts, leaks and damage.
h. Check the chain pin or dead end pin and chain stop for wear and cracks.
i. Check for lubricant leaks at gasket between main frame and gear housing. Tighten gear housing screws to stop leak. If leak persists, replace gasket.
j. Inspect splines on first pinion shaft and motor coupling for signs of wear or deterioration. Replace splined parts if worn or damaged.
k. Check for air leaks at brake end cap. Replace piston seals to stop leaks.
l. Check for air leaks at the joints of the motor. Tighten screws to stop leaks. If leaks persist, disassemble motor, see page 8, and replace seals.
m. Check for air leaks at joint between the supply block and valve body. Tighten screws or replace gasket to stop leaks.
n. Check for air leaks at o-rings on top and under valve body. Tighten valve bolt or replace o-ring to stop leaks.

NOTE: To perform some of the periodic inspections, it is necessary to partially disassemble the hoist. Refer to Disassembly-Assembly starting on page 8.

Any deficiencies noted must be corrected before the hoist is returned to service. Also, the external conditions may show the need for more detailed inspection which, in turn, may require the use of nondestructive-type testing.

Any parts that are deemed unserviceable are to be replaced with new parts before the unit is returned to service. It is very important that the unserviceable parts be destroyed to prevent possible future use as a repair item and properly disposed of.

Hook Inspection

Hook damage from chemicals, deformations or cracks or that have more than a 10^0 twist from the plane of the unbent hook or excessive opening must be replaced.

Any hook that is twisted or has excessive throat opening indicates abuse or overloading of the unit. Other load-sustaining components of the hoist should be inspected for damage.

On latch type hooks, check to make sure that the latch is not damaged or bent and that it operates properly with sufficient spring pressure to keep the latch tightly against the tip of the hook and allow the latch to spring back to the tip when released. See below to determine when the hook must be replaced.

LOAD CHAIN

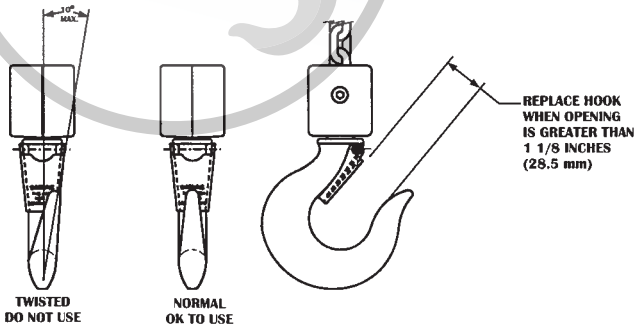

Figure 4. Hook Inspection

Chain should feed smoothly into and away from the hoist or hook block (500, 600 and 1000#, 226, 272 and 453 Kg. units). If chain binds, jumps or is noisy, first clean and lubricate it (see below). If trouble persists, inspect chain and mating parts for wear, distortion or other damage.

Chain Inspection

First clean chain with a non-caustic/non-acid type solvent and make a link by link inspection for nicks, gouges, twisted links, weld spatter, corrosion pits, sitriations (minute parallel lines), cracks in weld areas, wear and stretching. Chain with any one of these defects must be replaced.

Slack the portion of the chain that normally passes over the liftwheel. Examine the interlink area for the point of maximum wear (polishing, see figure 5). Measure and record the stock diameter at this point of the link. Then measure stock diameter in the same area on a link that does not pass over the liftwheel (use the link adjacent to the loose end link for this purpose). Compare these two measurements. If the stock diameter of the worn link is 0.010 inches (0.254 mm.), or more, less than the stock diameter of the unworn link, the chain must be replaced.

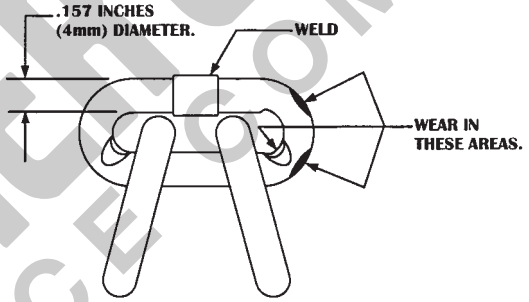

On the 500, 600 and 1000# (226, 272 and 453 Kg.) units, repeat this examination of the chain that passes through the hook block.

Also check chain for stretch using a vernier caliper as shown in figure 6. Select an unused, unstretched section of chain (usually at the loose end) and measure and record the length over 11 chain links (pitches). Measure and record the same length on a worn section of chain. Obtain the amount of stretch and wear by subtracting the measurement of the unworn section from the measurement of the worn section. If the result (amount of stretch and wear) is greater than 0.145 inch (3.7 mm.), the chain must be replaced.

Use only a “Knife-edge” caliper to eliminate possibility of false reading by not measuring full pitch length.

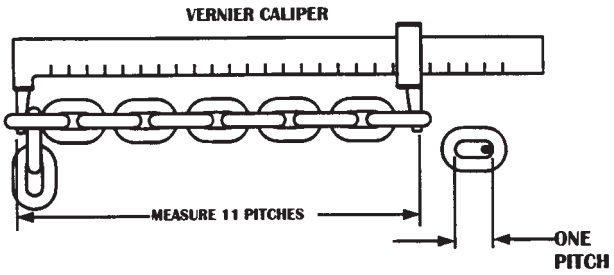

Figure 6. Chain Inspection

HOUSER CRANE SERVICE COMPANY

Note that worn chain can be an indication of worn hoist components. For this reason, the hoist's chain guide, hook block and liftwheel should be examined for wear and replaced as necessary when replacing worn chain.

Also, these chains are specially heat treated and hardened and should never be repaired.

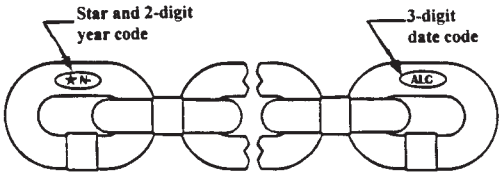

Use only Star (*) grade load chain and original replacement parts. Use of other chain and parts may be dangerous and voids factory warranty.

Figure 7. Chain Embossing

⚠ WARNING

Use of commercial or other manufactures' chain and parts to repair Model SAL Hoists may cause load loss.

TO AVOID INJURY:
Use only factory supplied replacement load chain and parts. Chain and parts may look alike, but factory original chain and parts are made of specific materials or processed to achieve specific properties. See Figure 7.

IMPORTANT: Do not use replaced chain for other purposes such as lifting or pulling. Load chain may break suddenly without visual deformtion. For this reason, cut replaced chain into short lengths to prevent use after disposal.

Chain Lubrication

A small amount of lubricant will greatly increase the life of load chain. Do not allow the chain to run dry. keep it clean and lubricate at regular intervals with Lubriplate® Bar and Chain Oil 10-R (Fiske Bros, Refining Co.) or equal lubricant. Normally, weekly lubrication and cleaning is satisfactory, but under hot and dirty conditions, it may be necessary to clean the chain at least once a day and lubricate it several times between cleanings.

⚠ WARNING

Used motor oils contain known carcinogenic materials.

TO AVOID HEALTH PROBLEMS:
Never use used motor oils as a chain lubricant. Only use Lubriplate® Bar and Chain Oil 10-R as a lubricant for the load chain.

When lubricating the chain, apply sufficient lubricant to obtain natural run-off and full coverage, especially in the interlink area.

LUBRICATION

Refer to Exploded View and Parts List on pages 10 thru 14.

⚠ WARNING

The lubricants used in and recommended for the SAL Hoist may contain hazardous materials that mandate specific handling and disposal procedures.

TO AVOID CONTACT AND CONTAMINATION:
Handle and dispose of lubricants only as directed in applicable material safety data sheets and in accordance with applicable local, state and federal regulations.

NOTE: To assure extra long life and top performance, be sure to lubricate the various parts of the Model SAL Hoist using the lubricants specified below. If desired, these lubricants may be purchased from Yale. Refer to page 11 for information on ordering the lubricants.

Gears

The Protector™ (620-111) should operate for the normal life of the hoist without service. The device has been lubricated and calibrated by Yale® and should not be adjusted.

CAUTION: The Protector™ is to be used with "Century Lubricants HB-11, #3" grease. Do not use any other grease or the Protector™ will not operate properly and parts could be damaged.

The gears and Protector™ are packed at assembly with grease and should not need to be renewed unless the gears have been removed from the housing and degreased.

CAUTION: Never degrease the Protector™ or attempt to disassemble this device. Degreasing the Protector™ may damage parts and using a device that has been degreased may cause erratic, inconsistent operation. If the Protector™ has been degreased, it must be replaced by a Yale® calibrated device.

If the gears are removed from the housing, wipe the excess grease off the outside surfaces of the Protector™ with a soft cloth and degrease the remaining gears and housings. Upon reassembly, add 2 oz. of the above grease to gears and housing. Also, coat the spline on the end of the first pinion and shaft (620-131) with a Molydisulphide lubricant such as Moly-Duolube 67 (Hercules Packing Co.).

Bearings

Needle bearings (620-109, 620-114, 620-115, 620-128 and 620-164) are packed at assembly with grease and should not need to be relubricated. However, if the housings (620-113 and 620-107), liftwheel (620-127) or sheave wheel (620-162) have been degreased, these bearings should be greased using "Century Lubricants HB-11, #3" grease.

Seals

When reassembling the unit, wipe the inside surface of the seals with "Century Lubricants HB-11, #3" grease.

Service Air Line Lubricator

The air line filter and lubricator is the only source of lubrication for control valves and air motor. Fill lubricator with a good grade air hoist motor oil or low machine oil (viscosity of 180 SSU at 100° F.). Multi-viscosity, detergent type oil is not recommended. Feed one drop of oil for every 50 to 75 cubic feet of air going through the air motor.

Hook Block

If the hook blocks are disassembled for inspection purposes, wipe the grease from the hook knob and the hook knob cavities in the hook blocks. At reassembly, coat the underside of the hook knob and the knob bearing surfaces of cavities in the hook blocks with Molykote BR-2-S (Dow Corning Corp.) grease or equivalent.

Chain Guide, Liftwheel and Sheave Wheel

When the hoist is disassembled for inspection and/or repair, the chain guide, stripper, sheave wheel (on double chain unit) and liftwheel must be lubricated with Lubriplate® Bar and Chain Oil 10-R (Fiske Bros. Refining Co.) prior to reassembly. The lubricant must be applied in sufficient quantity to obtain natural runoff and full coverage of these parts.

Load Chain

See above for lubrication of the load chain.

Exterior Finish

The exterior surface of the hoist has a durable, scratch resistant baked powder coating. Normally, the exterior surfaces can be cleaned by wiping with a cloth.

HUSSEY CRANE SERVICE COMPANY

BRAKE

The brake is non-adjustable with a nominal 0.004 inch (0.012 mm) air gap and the brake disc must be replaced when the gap reaches 0.012 inches (0.305 mm). The brake spacer should be no more than 0.012 inches (0.305 mm) thicker than the combined thickness of the brake disc and armature plate.

⚠ WARNING

Failure to follow proper lockout/tagout procedures may present the danger of injury from the escape of high pressure air.

TO AVOID HEALTH INJURY:

Disconnect the hoist from the air supply and lockout/tagout the main air supply valve before removing the cover or servicing this hoist.

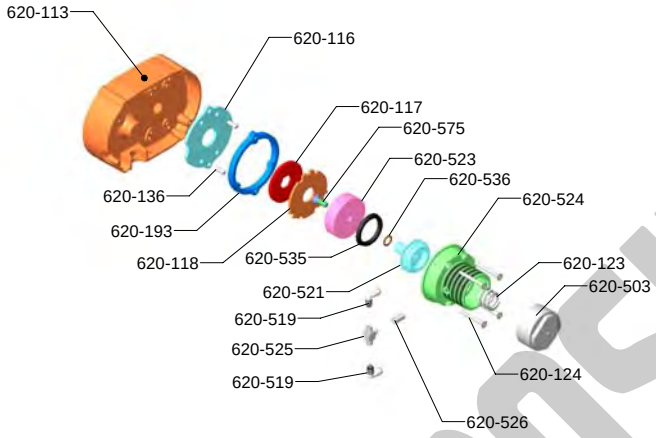

Figure 9. Brake

To inspect the air gap, disconnect the hoist from air supply. Remove the brake end cover (620-533) and brake end spacer (620-527) from the gear housing (620-113) to expose the brake. Disconnect the two air tubes from the air cylinder (620-524). Remove the air cyclinder cap (620-503) and brake spring (620-123). Remove the air cylinder (620-524) by removing the 4 screws (620-124). Remove the piston (620-521), o-ring (620-536), coupling (620-523) and seal (620-535) by removing screw (620-575). Removing the air cyclinder assembly will expose the brake armature (620-118), brake disc (620-117), brake spacer (620-193) and brake base plate (620-116). Inspect these parts and replace if worn or damaged. Check o-ring (620-536) and seal (620-535) and replace these if worn or damaged. Make sure to install new seal with the opening towards the coupling. Apply grease to the outside of the lip seal and o-ring. Making sure that the o-ring (620-536) is on piston shaft, slide the piston (620-521) into the air cylinder (620-524). Install coupling (620-523) into air cyclinder (620-524) using screw (620-575).

Be sure the brake leaf spring (620-121) on the (250, 300 and 500 pound (double reeved unit) 113, 136 and 226 Kg.) is properly installed (See Figure 10). Assemble the brake base plate (620-116), brake spacer (620-193), brake disc (620-117) and brake armature (620-118). Install 4 screw (620-526) into the air cyclinder (620-524). Install brake spring (620-123) and air cycliner cap (620-503). Reconnect the two air tubes. Assemble the brake end spacer (620-527) and end cover (620-533) to gear housing (620-113) using the three screws (620-507).

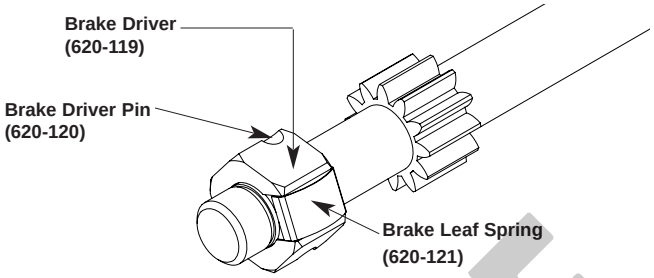

Figure 10.
(250, 300, 500 & 600 Pound (Double Reeved)
(113, 136, 226 & 272 Kg.)

Air Motor

Once a year, remove the air motor (see page 16) and check the condition of the bearings, rotor for possible rubbing on the body or end plates, free movement of the blades in rotor slots, seals and shims. Replace worn or damaged parts. If the motor appears to be in good condition, do not service other than lubricating well with light machine oil.

Pendant Throttle Control

Once a year, disassemble the pendant throttle control (see page 8) and check the condition of the springs, valves and levers. Replace worn or damaged parts. If the parts appear to be in good condition, do not service other than lubricating well with light machine oil.

Control Valve Assembly

Once a year, disassemble the control valve assembly (see Exploded View, Pages 13 & 14) and check the condition of the pistons, springs, spring seats, gasket, O-rings, valve bolts, air fittings and muffler. Replace worn or damaged parts. If the parts appear to be in good condition, do not service other than lubricating them with light machine oil.

PROTECTOR

The Protector™ should operate for the normal life of the hoist without service. The device has been lubricated and calibrated and it should not be adjusted. If the Protector™ is not operating properly (see testing on page 9), it must be replaced with a properly calibrated unit from the factory.

PREVENTIVE MAINTENANCE

A preventive maintenance program should be established to prolong the useful life of the hoist and maintain its reliability and continued safe use. The program should include the periodic and frequent inspections with particular attention being paid to the lubrication of the various components using the recommended lubricants (see page 11).

RECOMMENDED SPARE PARTS

To insure continued service of the Model SAL Hoist, the following is a list of parts that are recommended to be kept on hand at all times to replace parts that have worn or failed. Parts applicable to your hoist should be stocked.

Key No.	Part Name	Qty. Per Hoist	Key No.	Part Name	Qty. Per Hoist
620-117	Brake Disc	1	620-536	Piston Shaft Seal	1
620-512	Piston Return Spring	2	620-540	O-Ring	4
620-514	Piston	2	620-562	Gasket	1
620-515	Valve Gasket	1	620-564	Vane	4
620-531	Pendant Throttle Control	1	620-570	Oil Seal	1
620-535	Piston Seal	1	620-571	Snap Ring	1
620-576	Motor Repair Kit	1			

Refer to pages 9-14 for ordering instructions and the Parts List for part numbers.

HOOSIER LINE SERVICE COMPANY

DISASSEMBLY-ASSEMBLY

pages 10 thru 14. These show the proper relationship of the parts, the names of the parts and the required quantities of the parts. In addition, please observe the following:

⚠ WARNING

Components such as motors, valves, lines, filter/lubricators located after a closed shut-off valve can contain pressurized air. Disassembly in this state can cause injury.

Bleed the stored air by repeatedly depressing the pendant paddles.

1. Needle bearings are pressed into the gear housing (620-119), main frame (620-107), liftwheel (620-127) and lower sheave wheel (620-162). Unless they are to be replaced, do not attempt to remove these bearings.
2. A liftwheel seal (620-108) is pressed into the main frame (620-107) and a seal (620-130) is pressed into the end of the liftwheel shaft (620-148). Be careful that these seals are not cut or damaged during disassembly and reassembly.
3. Refer to page 7 for disassembly, inspection and reassembly of the brake.
4. When removing the brake driver (620-119), it must be supported while driving out the retainer pin (620-120). At reassembly, it must also be supported and the retainer pin must be driven in so that it is below the surface of the driver. File away any burrs and use the brake disc (620-117) as a gauge to make sure it will slide freely on the driver.
5. Do not attempt to disassemble the Protector™ - refer to page 7.
6. Refer to page 6 for lubrication instructions.
7. See next section for load chain removal and installation.
8. Tighten the various screws as follows:

KEY-NO.	PART NAME	SEATING LB. IN.	TORQUE NM
620-126	Pin Retainer Plate Screw	25	2.8
620-154	Motor Cover Screw	25	2.8
620-134	Gear Housing Screw	25	2.8
620-133	Brake End Cover Screw	25	2.8
620-168	Dead End Plate Screw	125	14.1
620-140	Hook Retainer Screw	10	1.1
620-157	Hook Block Screw 500, 600 and 1000 lbs. (226, 272 and 453 Kg.) (Double Reeved) units 250, 300 and 500 lbs. (113, 136 and 226 Kg.) (Single Reeved) units	125 50	14.1 5.6
620-510	Motor Screws	25	2.8
620-517	Valve Block Screws	25	2.8
620-518	Supply Bolt	50	5.6

9. To remove the air motor (620-538), remove the motor end cover (620-502) and motor end spacer (620-528). Loose the valve bolts (620-518) enough to remove the valve block assembly from the bottom of the motor. Remove the two screws used to attach the motor to the main frame (620-107) and carefully slide the motor shaft out of the coupling (620-508). If necessary, refer to page 9 for instructions for disassembling the motor.
10. To install the air motor (620-538), slide the coupling (650-508) onto the end of the motor shaft. Align splines on the first pinion and shaft (620-131) and coupling and then slide the motor into position. Secure the motor to the main frame (620-107) using two screws. Attach the valve assembly to the bottom of the motor using the two valve bolts (620-518), making sure the O-rings are on the valve bolts. Assemble the motor end spacer (620-528) and motor end cover (620-502) to the main frame using three screws.
11. Make sure the upper hook is properly installed as shown below.
12. After reassembly, test the unit per instructions on page 9.

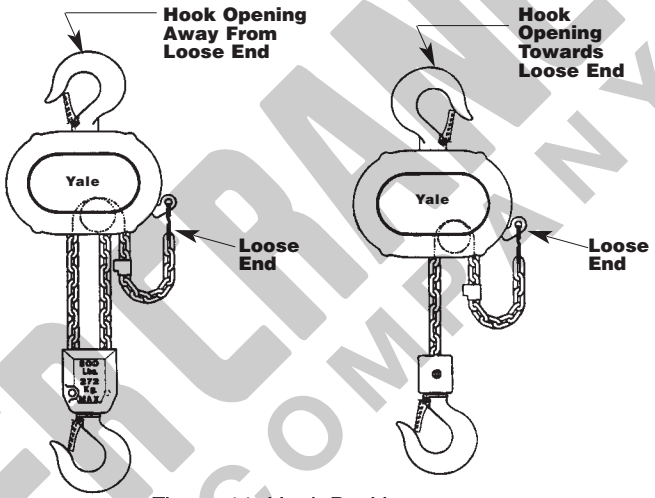

Figure 11. Hook Position

LOAD CHAIN REMOVAL/INSTALLATION

1. If unit has a chain container, remove it from the chain guide.
2. Remove the chain stop (620-146), Depress "DOWN" (🡻) lever and run chain out of hoist.
3. Feed a short length of soft wire through the opening between the chain guide (620-141), and stripper (620-143) until it comes out of the hoist. Remove the wire and attach the chain stop as shown in figure 11. On units with chain container, place the chain stop and loose end of chain in chain container. Attach chain container to chain guide.
4. Jog the "UP" (🡹) lever while pulling on the free end of wire until the chain comes out of the hoist. Remove the wire and attach the chain stop as shown below. On units with chain container, place chain stop and loose end of chain in chain container. Attach chain container to chain guide.
5. On the 250, 300 and 500# (Single Reeved) (113, 136 and 226 kg.) units, remove the hook block from the old chain and attach it to the new chain by reusing the

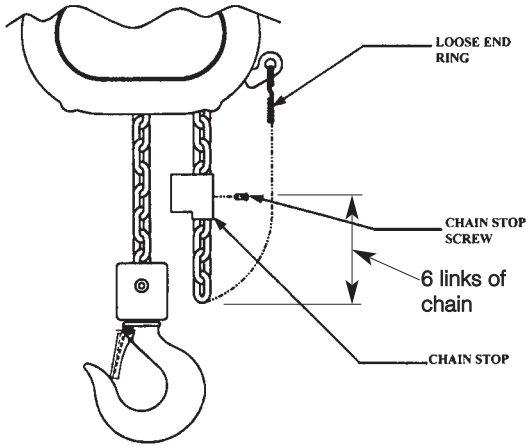

Figure 12. Attaching Loose End of Chain

HOOSIER CRANE SERVICE COMPANY

chain pin (620-158).

On the 500, 600 and 1000# (226, 272 and 453 kg.) units:

- Remove dead end plate (620-160) from hoist.
- Remove dead end pin (620-161) from the last link of chain and pull chain out of dead end plate.
- Pull old chain out of hook block and disassemble the hook block.
- Make sure the new chain is not twisted and wrap the chain around the sheave wheel (620-162) with welds down and towards the sheave wheel.
- Reassemble hook block and pull the new chain through the hook block.
- Slide the dead end plate over the last link and secure it using the dead end pin.
- Making sure the chain is not twisted between the hook block and hoist, attach the dead end plate to the stripper (620-143).
- Retrace the new chain and check for twists. If chain is twisted, start over.

IMPORTANT: Do not use "old" chain for other purposes such as lifting or pulling. Load chain may break suddenly without visual deformation. For this reason, cut the "old" chain into short lengths to prevent use after disposal.

CUTTING CHAIN

Hoistaloy® load chain is hardened and it is difficult to cut. The following methods are recommended when cutting a length of new chain from stock or cutting off worn chain. Always wear eye protection when cutting chain.

1. Use a grinder and nick the link on both sides (see right), then secure the link in a vise and break off with a hammer.

2. Use a 7"(177 mm) minimum diameter by 1/8" (3.1 mm) thick abrasive wheel (or type recommended by wheel supplier) that will clear adjacent links.
3. Use a bolt cutter (see right) with special cutter jaws for cutting hardened chain. Jaws should be 1 inch (25.4 mm) long.

⚠ WARNING

Cutting chain can produce flying particles.

TO AVOID HEALTH PROBLEMS:

- Wear eye protection.
- Place a shield over chain to prevent flying objects.

TESTING

Before using, all altered, repaired or used hoists that have not been operated for the previous 12 months must be tested by the user for proper operation. First, test the unit without a load and then with a light load of 50 pounds (23 kg) times the number of load supporting parts of load chain to be sure that the hoist operates properly and that the brake holds the load when control is released. Next test with a load of *125% of rated capacity. In addition hoists in which load sustaining parts have been replaced should be tested with *125% of rated capacity by or under the direction of an appointed person and a written report prepared for record purposes. After this test, check the Protector™ functions. If the Protector™ permits lifting a load in excess of 200% of rated load, it should be replaced.

*If the Protector™ prevents lifting of a load of 125% of rated capacity, reduce load to rated capacity.

NOTE: For additional information on inspection and testing, refer to ASME B30.16 "Overhead Hoists" obtainable from ASME Order Department, 22 Law Drive, Box 2300, Fairfield, NJ 07007-2300, U.S.A.

ORDERING INSTRUCTIONS

The following information must accompany all correspondence and orders for replacement parts:

1. Hoist rated load from identification plate.
2. Serial number of the hoist from identification plate.
3. Length of lift.
4. Key number of part from parts list.
5. Number of parts required.
6. Part name from parts list.
7. Part number from the parts list.

NOTE: When ordering replacement parts, it is recommended that consideration be given to the need for also ordering such items as gaskets, fasteners, seals, etc. These items may be damaged or lost during disassembly or just unfit for future use because of deterioration from age or service.

⚠ WARNING

Using "commercial" or other manufacturer's parts to repair the Model SAL Hoist may cause load loss.

TO AVOID INJURY:

Use only factory supplied replacement parts. Parts may look alike but factory original parts are made of specific materials or processed to achieve specific properties.

HOSEFRAME SERVICE COMPANY

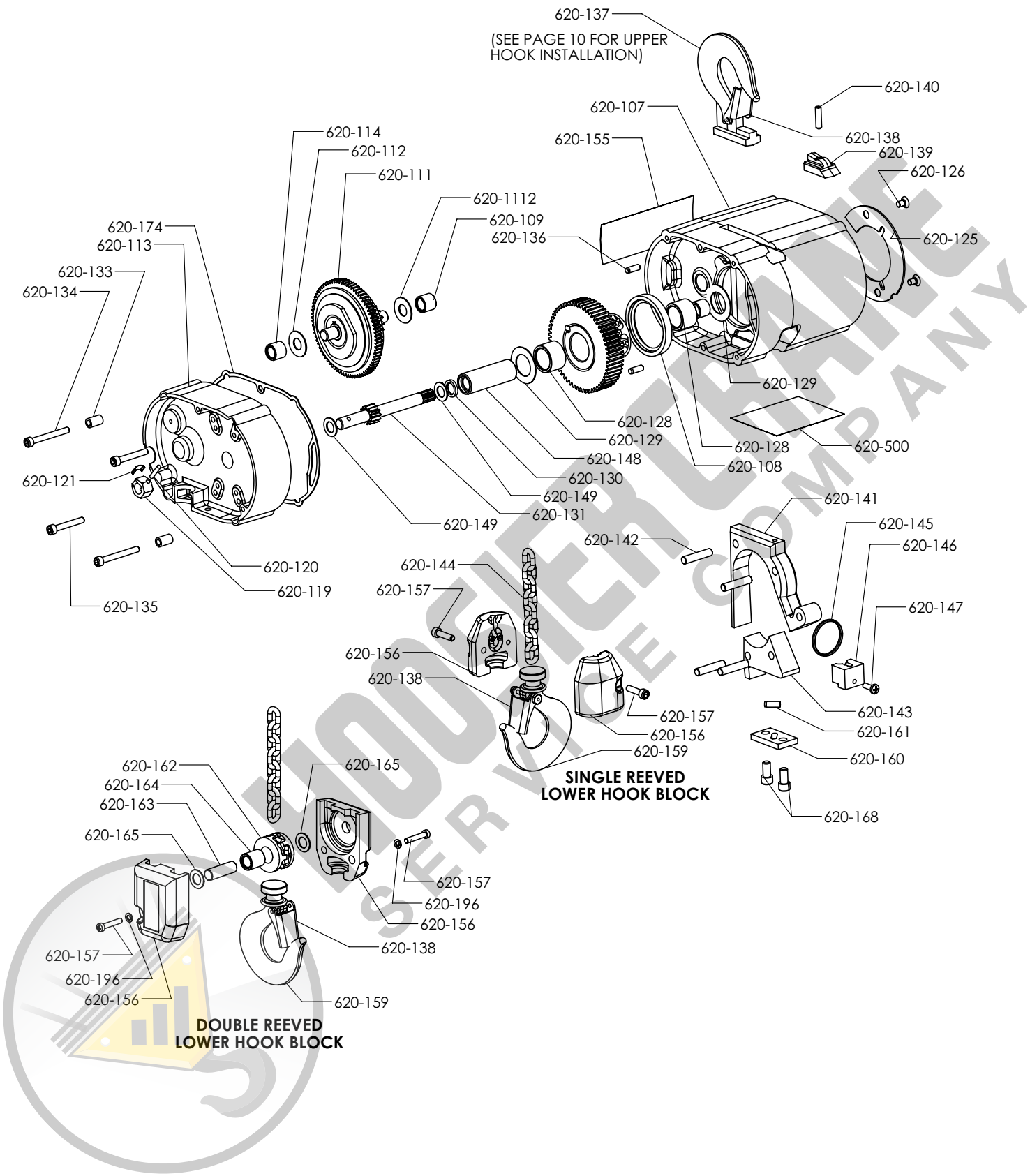

MODEL SAL MECHANICAL PARTS EXPLODED VIEW

MODEL SAL PARTS LIST

Key No.	Description	Qty.	Part No.
620-107	Main Frame	1	20367
620-108	Liftwheel Seal	1	20705
620-109	Protector Bearing, Main Frame Side	1	88636
620-111	Protector Assembly 500# (Single Reeved) & 1000# Units	1	20645 20665
620-112	Thrust Washer, Second Pinion	2	88640
620-113	Gear Housing	1	20368
620-114	Protector Bearing, Gear Housing Side	1	88636
620-115	First Pinion Bearing	1	88635
620-116	Brake Base Plate	1	20419
620-117	Brake Disc 500# (Single Reeved) & 1000# Units	1	20722 20684
620-119	Brake Driver	1	20776
620-120	Brake Driver Pin	1	983976
620-121	Leaf Spring	1	20775
620-125	Pin Plate	1	20700
620-126	Pin Plate Screw	2	20743
620-127	Liftwheel and Gear Assembly 500# (Single Reeved) & 1000# Units	1	20664 20666
620-128	Liftwheel Bearing	2	88637
620-129	Thrust Washer, Liftwheel	2	88638
620-130	Liftwheel Shaft Seal	1	20704
620-131	First Pinion and Shaft 500# (Single Reeved) & 1000# Units	1	20306 20423
620-133	Spacer	2	20964
620-134	Gear Housing Screw	2	20384
620-135	Gear Housing Screw (short)	2	20718
620-136	Dowel Pin	4	920720
620-137	Upper Hook	1	20650
620-138	Hook Latch Kit	2	595522
620-139	Hook Retainer	1	20712
620-140	Hook Retainer Screw	1	920722
620-141	Chain Guide	1	20304
620-142	Chain Guide Pin	4	20729
620-143	Chain Stripper	1	20305
620-144	Load Chain (Specify Length Req'd.)	-	85988
620-145	Loose End Ring	1	20744
620-146	Chain Stop	1	20319
620-147	Chain Stop Screw	1	25858
620-148	Liftwheel Shaft	1	20313
620-149	Thrust Washer, First Pinion	2	88639
620-155	Caution Label	1	20758
620-156	Hook Block 250#, 300# & 500# Single Reeved	2	20995
	500#, 600# and 1000#	2	20739
620-157	Hook Block Screw 250#, 300# & 500# Single Reeved	2	920730
	500#, 600# and 1000#	2	920724
620-159	Hook (Includes 620-138)	1	23030

Key No.	Description	Qty.	Part No.
620-160	Dead End Plate 500#, 600# and 1000#	1	20714
620-161	Dead End Pin 500#, 600# and 1000#	1	920720
620-162	Sheave Wheel (Includes 620-164) 500#, 600# and 1000#	1	20652
620-163	Sheave Wheel Shaft 500#, 600# and 1000#	1	20318
620-164	Sheave Wheel Bearing 500#, 600# and 1000#	1	88641
620-165	Sheave Wheel Thrust Washer 500#, 600# and 1000#	2	88639
620-168	Dead End Plate Screw 500#, 600# and 1000#	2	73715
620-174	Gasket	1	20755
620-196	Hook Block Lockwasher	2	940802

Part Number for Packaged Lubricants Used in the SAL

(Refer to Page 6 for Lubrication Instructions)

Lubricant Usage	Type Lubricant	Part Numbers and Packaged Quantity of Lubricants
Hoist Gears	Grease Century Lubricants HYB-11,#3	28605 for 1/2 lb. Can 28615 for 1 lb. Can 28617 for 4 lb. Can.
Spline one end of First Pinion and Shaft	Oil-Graohite Mixture Hercules Packing Co. Moly-Duolube	40628 for 1 Pint Can
Load Chain	Oil Friske Bros. Lubriplate® Bar and Chain Oil #10R	28608 for 1 Pint Can 28619 for 1 Gal. Can
Lower Hook Knob	Grease Dow Corning Molykote BR-2-S	28606 for 1/2 lb. Can 28618 for 1 lb. Can

When ordering lubricants, specify the type of lubricant, part number and packaged quantity required.

HOOSIER CRANE SERVICE COMPANY

MODEL SAL PARTS LIST

Key No.	Description	Qty.	Part No.
620-103	Rotor Bearing, Inboard	1	88486
620-116	Brake Base Plate	1	20419
620-118	Armature Plate	1	20420
620-123	Brake Spring	1	20887
620-124	Brake Screw	4	920740
620-169	Capacity Plate 250#	1	20762
	300#	1	20737
	500#	1	20763
	600#	1	20738
	1000#	1	20884
620-193	Brake Spacer	1	20723
620-501	Yale Label	1	20899
620-502	Motor Cover, Yellow	1	20415Y
620-503	Cylinder Cap	1	20425
620-504	Motor Cover Screw (1.75” Lg.)	1	20947
620-505	Motor Cover Screw (3.50” Lg.)	1	20957
620-506	Motor Cover Screw (5.75” Lg.)	1	20945
620-507	Brake Cover Screw	3	20946
620-508	Motor Coupling	1	20391
620-509	Air Tubing (Specify Length Req’d.)	1	20948
620-510	Air Motor Screw	2	20958
620-511	Valve Body	1	20392
620-512	Piston Return Spring	2	20949
620-513	Spring Seat	2	20393
620-514	Piston	2	20394
620-515	Valve Gasket	1	20951
620-516	Supply Block	1	20395
620-517	Valve Body Screw	6	20959
620-518	Valve Bolt	2	20396
620-519	Swivel Elbow	4	20952
620-520	Male Connector	6	20953
620-521	Brake Piston	1	20424
620-523	Brake Coupling	1	20426
620-524	Air Cylinder	1	20427
620-525	Brake Shuttle Valve	1	20955
620-526	Swivel Fitting	1	20956
620-527	Brake End Spacer, Yellow	1	20413Y
620-528	Motor End Spacer, Yellow	1	20414Y
620-529	Control Tube (Specify Length Req’d.)	1	83945
620-530	Set Screw	1	20960
620-531	Pendant Throttle Control	1	647521600
620-533	Brake Cover, Yellow	1	20411Y
620-534	Muffler	1	20963
620-535	Piston Seal	1	11388201
620-536	Piston Shaft Seal	1	20211
620-537	Coupling Pin	2	982315
620-538	Air Motor	1	20950
620-539	Air Motor Screw Lockwasher	2	957844
620-540	O-Ring	4	20991
620-541	Warning Tube	1	687J6
620-542	Coupling	1	20990
620-543	Control Tube and Pendant Throttle Control for 10 ft. (3m) Lift. For other Lifts, contact Factory.	1	20680
620-550	Lever Pin	2	647521606S
620-551	Lever	2	648888613S
620-552	Throttle Valve	2	648885601S
620-553	Throttle Valve Seal	4	648885602S

Key No.	Description	Qty.	Part No.
620-554	Throttle Valve Spring	2	648885615S
620-555	Throttle Valve Cap	2	648885616S
620-556	Throttle Valve Cap Seal	2	648885617S
620-557	Housing	-	Order Complete Station
620-558	Valve Housing	-	Order Complete Station
620-559	Valve Housing Seal	2	648885611S
620-560	Valve O-Ring	1	648885603S
620-561	“S” Hook	1	10814701
620-573	Strain Line Sleeve	1	989873
620-574	O.D. Cap Red	2	20997
	O.D. Cap White	2	20998
	O.D. Cap Blue	2	20999
620-575	Brake Screw	1	970980
620-576	Motor Repair Kit Kit Includes: Shaft Seal, Drive End Bearing, Dead End Bearing, Vanes, Push Pins, Spring & End Cap Gasket.	1	21900

HOOSIER CRANE SERVICE COMPANY

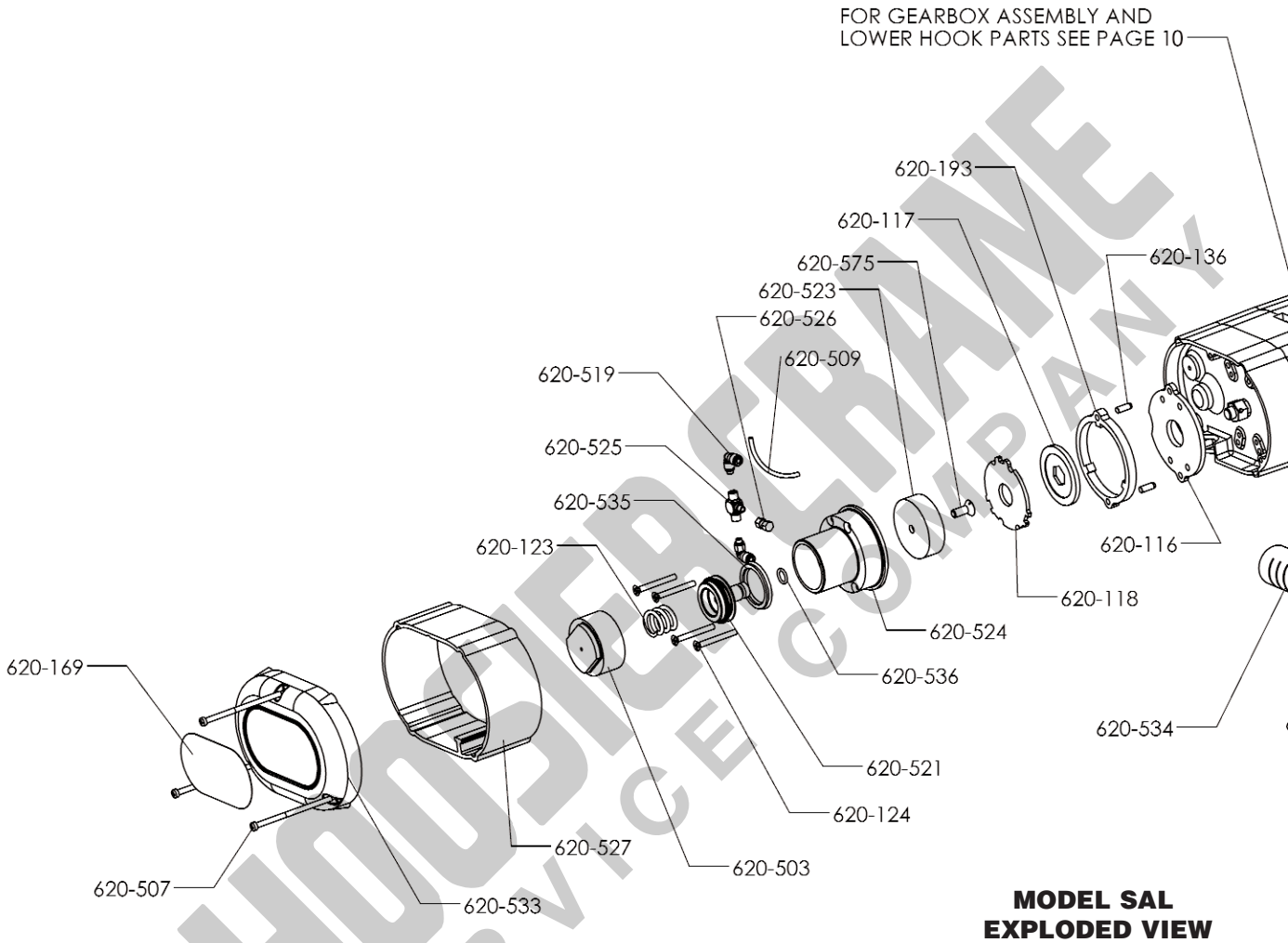

MODEL SAL
EXPLODED VIEW
AIR HOIST PARTS

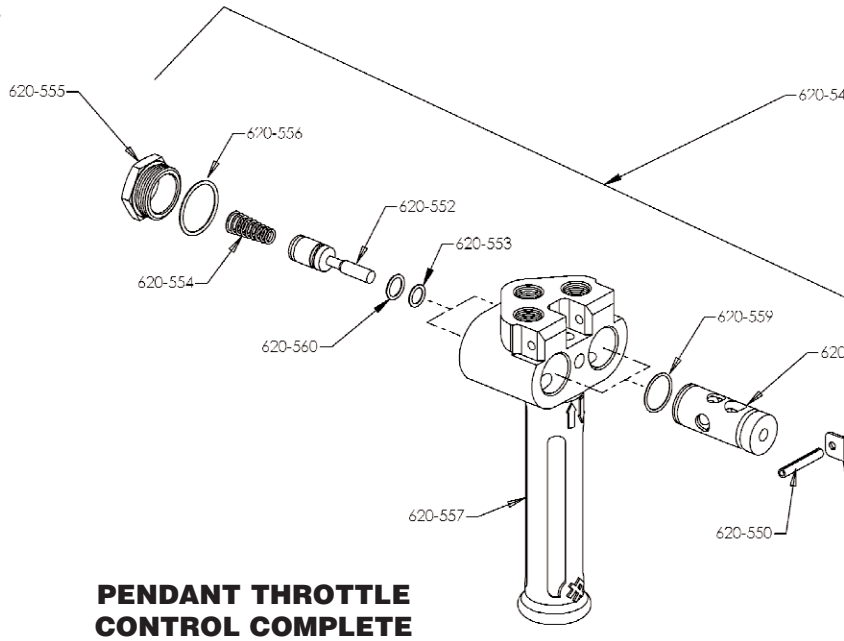

PENDANT THROTTLE
CONTROL COMPLETE
620-531

HOOSIER CRANE SERVICE COMPANY

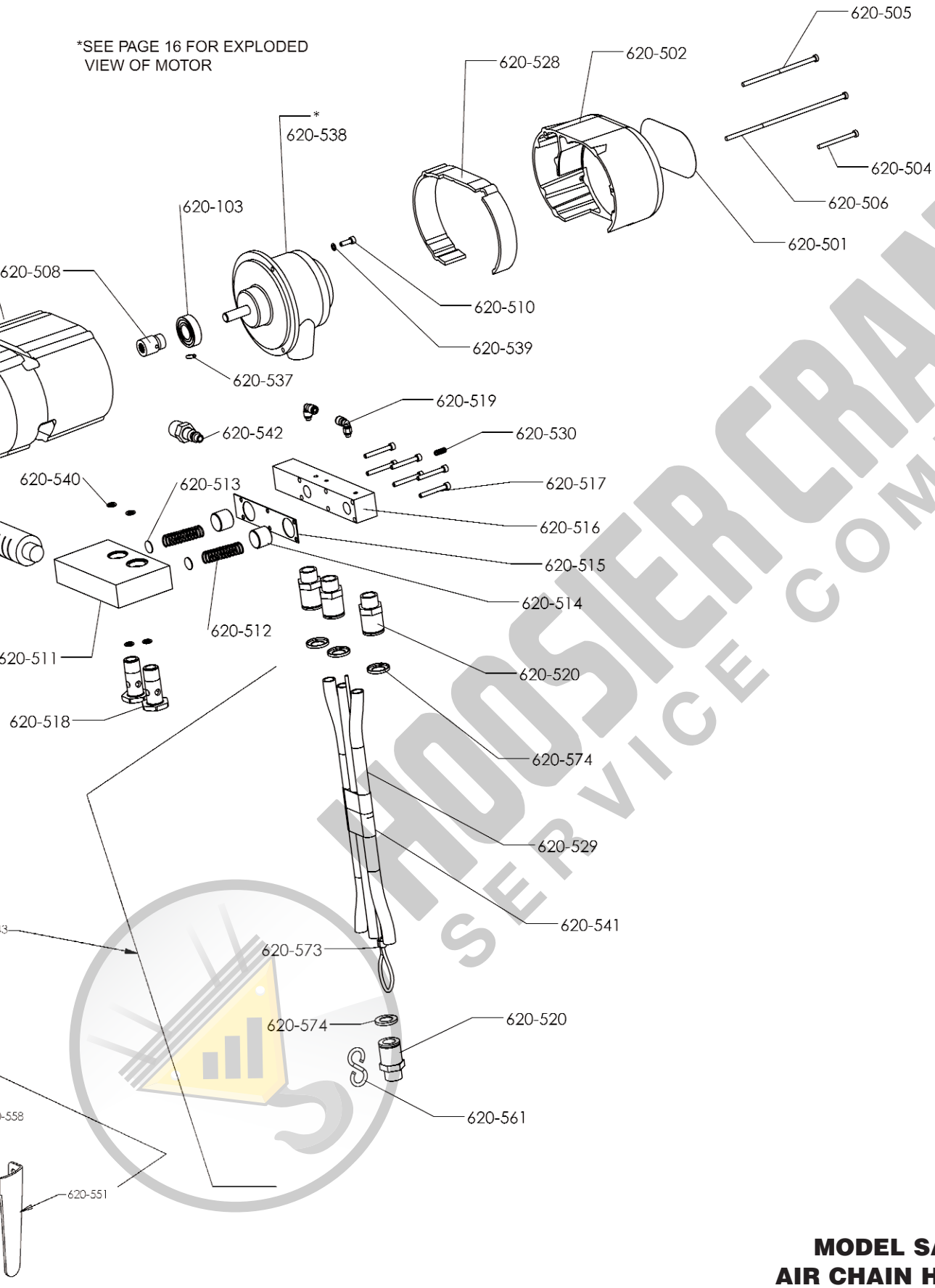

HOOSIER CRANE SERVICE COMPANY

MODEL SAL
AIR CHAIN HOIST
EXPLODED VIEW

TROUBLESHOOTING

TROUBLE	PROBABLE CAUSE	REMEDY
1. Hoist does not operate.	a. Insufficient air pressure at source. b. Insufficient air supply at hoist. c. Clogged air intake or muffler. d. Excessive overload. e. Clogged valve block. f. Clogged pendant throttle control. g. Motor failure. h. Lack of lubrication. i. Brake not operating.	a. Check and adjust air pressure. b. Use correct size air supply hose (see page 3). c. Shut off air supply, disconnect air supply hose and clean air filter and muffler. d. Reduce load to the rated capacity of the hoist. e. Disassemble and check for free movement of pistons. f. Disassemble and check parts (see page 8). g. Disassemble motor and check rotor vanes (see page 16). h. Make sure there is oil in the lubricator. i. Make sure the air tubing to the brake are not kinked or pinched. Disassemble brake and check for proper piston operation (see page 7). Replace worn or damaged parts.
2. Hoist will not hold load in suspension.	a. Brake not holding. b. Broken brake spring. c. Excessive overload.	a. See item 1(i). b. Replace spring. c. See item 1(d).
3. Hook will raise but will not lower or hook will lower but not raise.	a. Clogged pendant throttle control. b. Clogged valve block. c. Excessive load.	a. See item 1(f). b. See item 1(e). c. See item 1(d).
4. Hoist looses power.	a. Insufficient air pressure. b. Clogged valve block. c. Clogged muffler. d. Worn or broken rotor vanes.	a. See item 1(a). b. See item 1(e). c. Clean or replace muffler. d. Replace worn or damaged rotor vanes (see page 9).
5. Pendant throttle control levers do not return to off position.	a. Foreign material, rust or corrosion in pendant throttle control, levers bent or lever pivot pin bent.	a. Clean pendant throttle control and replace worn or damaged parts. (see page 8).
6. Cannot regulate speed using the pendant throttle control levers.	a. Brake not operating properly. b. Pendant throttle control not operating properly.	a. See item 1(i). b. See item 5.
7. Lifting and lowering speeds differ from rated speeds.	a. Incorrect air pressure or inadequate air supply. b. Loss of power.	a. Check air pressure at hoist when hoist is operating. (see page 3). b. See item 1(b).

When disassembling and assembling the Yale Model SAL Air Hoist, refer to the exploded view and the parts list on

HOISTCRANE SERVICE COMPANY

MOTOR REBUILD:

1. Remove dead end screws (12) from dead end cap (11). Remove dead end cap (11) and dead end gasket (10) from dead end plate (9).
2. Remove dead end plate bolts (13) from dead end plate (9). (Use proper tool, do not use a screwdriver to remove dead end plate).
3. Remove the dowel pins from the body (8) and push back into end plate until flush or just below the machined surface of the dead end plate.
4. Remove rotor (4) using an arbor press.
5. Remove vanes (5), vanes springs (7) and spring pins (6).
6. Remove shaft seal (1) and bearing (2) from drive end plate (3) and bearing (2A) from dead end plate (9). (Use proper tools). Do not remove drive end plate bolts (14) or drive end plate (3).
7. Clean parts. Check for scoring on the dead end plate (9), drive end plate (3) and rotor assembly (4). If scoring exists, motor should be replaced.
8. Place vane springs (7) and push pins (6) into rotor (4).
9. Place the drive shaft of the rotor assembly (4) through the drive end plate (3). Press the drive end bearing (2) onto the rotor drive shaft. (Use Proper Tool.) Lightly tap on inner race of the drive end bearing (2) to snug up rotor (4) to drive end plate (3).
10. Install new vanes (5). The notch on the vane faces to center of the rotor (4).
11. Place end plate gasket (10) on the body of the dead end (9). Place the dead end plate (9) on the body (8). Install the dead end bearing (2A) and press into place. (Use Proper Tool).
12. Install the dowel pin and fully tighten the remaining bolts to 80-120 In-Lbs. Set end clearances as required. Lightly tap on the inner race of the dead end bearing (2A) to free up and center the rotor (4) in the body (8).
13. Apply a small amount of grease to bearing seal and install the drive end bearing seal by pressing flush. (Use Proper Tools.)
14. Reattach dead end cap (11) with dead end cap screws (12). Apply a few drops of 10W oil into ports and rotate shaft by hand for a few rotations.

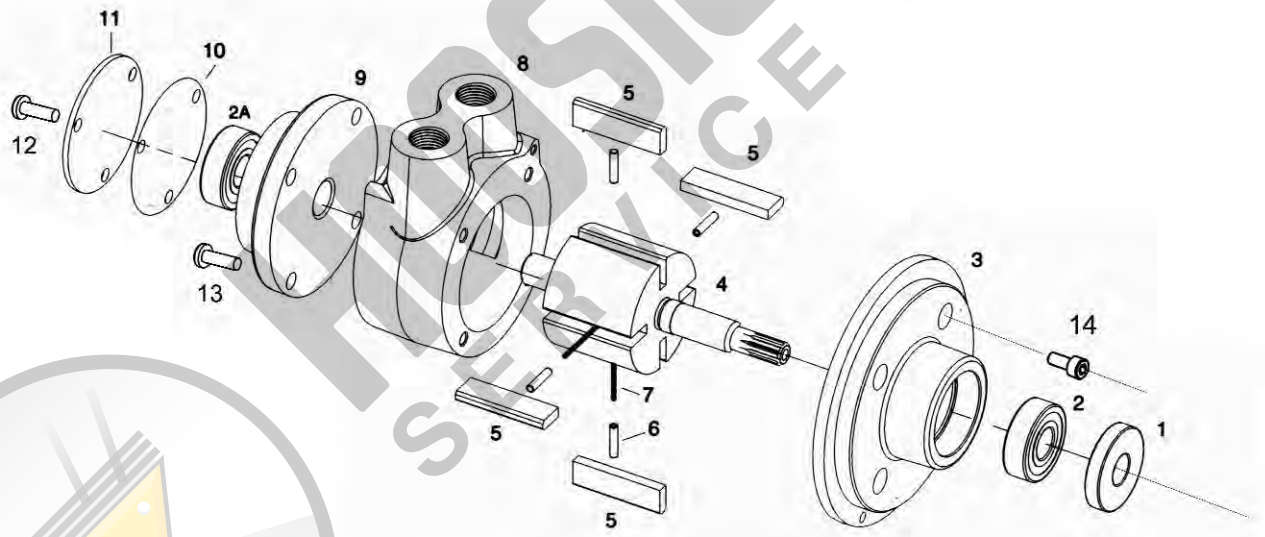

PENDANT THROTTLE CONTROL
(Refer to Exploded View on Pages 13 & 14)

A. Disconnect the hoist from the air supply system and depress the operating levers to exhaust the air from the hoist.
B. Disconnect the three air hoses from the top of the pendant throttle control.
C. Remove the strain line from the top of the control handle (620-557).
D. Remove the two throttle valve caps (620-555) from the back side of the control handle .
E. Remove the throttle valve spring (620-554) from under each cap.
F. Thread a #10-24 screw into the threaded hole in the throttle valve (620-552) and pull the valve out of the control handle.
G. Clean all parts thoroughly using a mild solvent and check them for wear and damage. Check levers (620-551) for free movement. Replace all worn or damaged parts.
H. Lightly lubricate all parts and re-assemble the pendant throttle in the reverse order.
I. Re-attach the air tubes to the top of the control handle and reconnect the strain line.
J. Reconnect the hoist to the air supply and test for proper operation.

HOSIER CRANE SERVICE COMPANY

NOTES

HOOSIER CRANE SERVICE COMPANY