OPERATION, SERVICE & PARTS MANUAL

WIRE ROPE HOISTS

SHAW-BOX®
WORLD SERIES

Before installing hoist, fill in the information below.
Refer to the Hoist and Motor data plates.

Model No. _____
Serial No. _____
Purchase Date _____
Voltage _____
Rated Load _____

RATED LOADS THRU 15 METRIC TONNE

Follow all instructions and warnings for inspecting, maintaining and operating this hoist.

The use of any hoist presents some risk of personal injury or property damage. That risk is greatly increased if proper instructions and warnings are not followed. Before using this hoist, each operator should become thoroughly familiar with all warnings, **instructions and recommendations in this manual. Retain this manual for future reference and use.**

Forward this manual to operator. Failure to operate equipment as directed in manual may cause injury.

SHAW-BOX®

B, C & D-FRAME MODELS
(MONORAIL)

P/N: 11353398 REV. AC October 2018

HOISTECH SERVICE COMPANY

SHAWBOX HOIST PARTS AND SERVICES ARE AVAILABLE IN THE UNITED STATES AND IN CANADA

As a SHAWBOX Hoist and Trolley user you are assured of reliable repair and parts services through a network of Master Parts Depots and Service Centers that are strategically located in the United States and Canada. These facilities have been selected on the basis of their demonstrated ability to handle all parts and repair requirements promptly and efficiently. To quickly obtain the name of the Master Parts Depot or Service Center located nearest you, call (800) 888-0985, Fax: (716) 689-5644, visit www.cmworks.com.

LAS PIEZAS Y REPARACIONES DE LOS POLIPASTOS DE SHAWBOX ESTÁN ASEGURADAS EN ESTADOS UNIDOS Y CANADÁ

Como usuario de un polipasto y carro de SHAWBOX le aseguramos cualquier reparación o la disponibilidad de cualquier pieza de repuesto a través de una red de almacenes de piezas de repuesto y centros de servicio situados estratégicamente en Estados Unidos y Canadá. Estas instalaciones se han seleccionado en base a su capacidad demostrada en la reparación de equipos y suminstro de piezas de repuesto de forma rápida y eficaz. Para obtener la dirección del almacén de piezas de repuesto o del centro de servicio más cercano, llame al teléfono (800) 888-0985. Fax: (716) 689-5644, visita www.cmworks.com. (sólo en Estados Unidos y Canadá).

LE SERVICE DE RÉPARATION ET DE PIÈCES POUR PALANS SHAWBOX EST DISPONIBLE AUX ÉTATS-UNIS ET AU CANADA

Soyez assurés qu'en temps d'utilisateur de palan et treuil SHAWBOX, d'un service de réparation et de pièces fiable par l'entremise d'un réseau de Centres de service et de Dépôts de pièces maîtresses qui sont stratégiquement situés aux États-Unis et au Canada. Ces établissements ont été sélectionnés sur une base de leur habileté démontrée à s'occuper promptement et efficacement des besoins de réparation de pièces. Appelez le (800) 888-0985, Fax: (716) 689-5644, visite www.cmworks.com. pour obtenir rapidement le nom du dépôt de pièces maîtresses ou du centre de service situé le plus près.

MODERN CRANE SERVICE COMPANY

FOREWORD

This manual contains important information to help you install, operate, maintain and service your new SHAWBOX electric hoist. We recommend that you study its contents thoroughly before putting the hoist into use. We also recommend that you read Section IX - Series Lifting Equipment of the European Federation of Materials Handling and Storage Equipment (FEM) and the applicable performance and safety standards referenced therein. Then, through proper installation, application of correct operating procedures, and by practicing the recommended maintenance procedures, you can expect maximum lifting service from the hoist.

It will likely be a long time before parts information found in the Parts List is needed. Therefore, after the hoist is installed and you have completely familiarized yourself with operation and preventative maintenance procedures, we suggest that this book be carefully filed for future reference.

When ordering replacement parts from this book, it will be necessary that you include with your order: the Hoist Serial Number and Model Number that are found on the nameplate attached to the hoist as shown in Figure 4-1. For your convenience, a space has been provided on the front cover of this Manual for entering this information. We recommend that you fill it out immediately so it is readily at hand when needed.

The contents of this manual are of necessity, general in nature and may cover features not incorporated on your hoist; or, you may have ordered features not covered by this manual. Therefore, the user must exercise care in applying instructions given in this manual. If specific information not in this manual is required, contact the factory.

THE INFORMATION CONTAINED IN THIS MANUAL IS FOR INFORMATIONAL PURPOSES ONLY AND SHAWBOX DOES NOT WARRANT OR OTHERWISE GUARANTEE (IMPLIEDLY OR EXPRESSLY) ANYTHING OTHER THAN THE COMPONENTS THAT SHAWBOX MANUFACTURES AND ASSUMES NO LEGAL RESPONSIBILITY (INCLUDING, BUT NOT LIMITED TO CONSEQUENTIAL DAMAGES) FOR INFORMATION CONTAINED IN THIS MANUAL.

NOTICE: Information contained in this book is subject to change without notice.

INDEX

SECTION I GENERAL DESCRIPTION — Page
Paragraph 1-1 General 3
Paragraph 1-2 Basic Construction 3
Paragraph 1-3 Selection & Application Guide 3

SECTION II INSTALLATION
Paragraph 2-1 General 4
Paragraph 2-2 Installing Hoist 4
Paragraph 2-3 Connecting Hoist to Electrical Service 5
Paragraph 2-4 Pre-Operational Checks 5

SECTION III OPERATION
Paragraph 3-1 General 6
Paragraph 3-2 Push Button Operation 6
Paragraph 3-3 Operating Precautions 6

SECTION IV LUBRICATION
Paragraph 4-1 General 7
Paragraph 4-2 Changing Gear Case Oil 7
Paragraph 4-3 Lubrication of Hoist Cable 8
Paragraph 4-4 Lubrication of Limit Switch 8
Paragraph 4-5 Lubrication of Geared Trolley Wheels and Pinions 8
Paragraph 4-6 Lubrication of Rope Guide 8
Paragraph 4-7 Lubricant Specifications 9

SECTION V INSPECTION AND PREVENTIVE MAINTENANCE
Paragraph 5-1 General 10
Paragraph 5-2 Inspection Lower Block 13
Paragraph 5-3 Inspection Upper Block 13
Paragraph 5-4 Inspection Electrical Controls 13
Paragraph 5-5 Inspection of Rope Guide 13
Paragraph 5-6 Rope Inspection, Replacement & Maintenance 14
Paragraph 5-7 Rope Reeving 15
Paragraph 5-8 Inspection of Rope Drum & Shaft 17
Paragraph 5-9 Inspection of Hoist Gearing 17
Paragraph 5-10 Inspection of Motor Brake & Actuating Mechanism 18
Paragraph 5-11 Inspection of Traverse Drive 21
Paragraph 5-12 Testing Block Operated Limit Switch 22
Paragraph 5-13 Testing Over-Capacity Limit Switch 22
Paragraph 5-14 Testing Hoist 22

SECTION VI TROUBLESHOOTING 22

SECTION VII ADJUSTMENTS
Paragraph 7-1 Motor Brake Adjustment 24
Paragraph 7-2 Block Operated Limit Switch Adjustment 24
Paragraph 7-3 Geared Rotary Limit Switch Adjustment 24
Paragraph 7-4 Over-Capacity Limit Switch Adjustment 25
Paragraph 7-5 Shortening of Push Button Station 25

SECTION VIII WIRING DIAGRAMS 25-27

SECTION IX PARTS LIST
Paragraph 9-1 General 28
Paragraph 9-2 List of Parts Illustrations 28

No part of this document may be reproduced in any form, in an electronic retrieval system or otherwise, without prior written permission of the publisher.

SECTION I - GENERAL DESCRIPTION

1-1. GENERAL.

SHAWBOX World Series electric hoists are wire rope and drum type hoists that are manufactured with an integral trolley. These hoists are all low headroom models with the rope drum and upper block or dead end supported on opposite sides of the beam, by the trolley frame. There are three basic frame sizes, each with two standard lifts. The "B" Frame handles capacities up to 5 tonne, the "C" Frame handles up to 10 tonne and the "D" Frame handles up to 15 tonne. The "B" Frame has an integral trolley with three different flange width ranges available: 4 5/8" through 8", 8-1/8" through 14" and 14-1/8" through 20" with a maximum flange thickness of 1-5/8". The "C" Frame integral trolley has a flange width range of 6" through 20", with the same range breaks and flange thickness allowance as the "B" Frame above. The "D" Frame integral trolley has a flange width range of 8" through 14" and 14-1/8" through 20" with a maximum flange thickness of 1-3/4". The hoist motor is 2-speed with a 4:1 ratio between high and low speeds, as standard. The motor driven trolley has two available speeds with 1, 2 speed, or variable frequency control.

The 2 part reeved hoist has the same three basic frame sizes as stated above. Each frame size has one basic 80' standard lift. The “B" frame handles capacities up to 2-1/2 tonne, the “C" frame handles capacities up to 5 tonne and the “D" frame handles capacities up to 7-1/2 tonne.

The trolley adjustment range for the 2 part reeved hoist is as follows. The “B" frame flange width range is 4-5/8" through 6", 6-1/8" through 12" and 12-1/8" through 18". Maximum flange thickness is 1-5/8".

The “C" frame flange width range is 4-5/8" through 6", 6-1/8" through 12", 12-1/8" through 18" and 18-1/8" through 24". Maximum flange thickness is 1-5/8".

The “D" frame flange width range is 4-5/8" through 6", 6-1/8" through 12" and 12-1/8" through 18". Maximum flange thickness is 1-3/4".

Throughout this manual, you will see references to the “S2" and “S4" frame size hoists. If you are unsure about which frame type you have, count the number of rope falls that are supporting the lower block or see section 5-7 rope reeving.

1-2. BASIC CONSTRUCTION

SHAWBOX World Series hoists consist of a rugged steel frame, made from structural tubing, which houses a lifting drum and serves as the suspension means for the rated hoist load. An aluminum gearcase, attached to one end of the drum frame, houses a triple-reduction, helical gear train. Applying power to the gearcase is a 2-speed, AC hoisting motor with a 4:1 speed ratio coupled with a 200% torque DC brake. High strength wire rope and a covered lower sheave block act as the load carrying means. Standard equipment includes a rope guide, a rotary-geared limit switch to limit hook travel in both up and down directions and an overload capacity limit switch. A block operated limit switch can be used to limit the upward travel of the lower block. An integral trolley, consisting of a 2-speed AC motor and a sealed worm reducer, applies torque to the trolley wheels through a cross-shaft and pinion arrangement, which provides traverse motion to the hoist. A single NEMA 4/12 control enclosure houses both the hoist and trolley electrical system controls. A push button control station (purchased separately) for operating the hoist is suspended on a wire strain cable attached to the hoist.

1-3. SELECTION & APPLICATION GUIDE.

Hoist Duty Classification

Your SHAWBOX World Series hoist was designed to meet a specific duty classification as described by the FEM “Rules for the Design of Serial Lifting Equipment". The methodology used to determine the duty class requirements of your specific application is shown below.

SHAWBOX World Series hoists are defined as “mechanisms" by the FEM and are classified as such by the following factors: **Class of Operating Time and Load Spectrum.** Your application must be definable by these two factors in order to determine duty classification.

Class of Operating Time

Class of Operating Time indicates the average period per day during which the mechanism is in operation, which is anytime the equipment is in motion. The Class of Operating Time is determined by calculation of the average daily operating time (average daily use):

Where:

t = Average Daily Operating Time (hr/day)

H = Average Hoist Height (ft)

N = Number of Cycles Per Hour (cycles/hr)

T = Daily Working Time (hr/day)

V = Hoisting Speed (ft/min)

$$t = \frac{2 \times H \times N \times T}{V \times 60}$$

Load Spectrum

Load Spectrum indicates the extent of which the mechanism is subjected to maximum stresses (full capacity lifts) or whether it is subject to smaller loads only. Use the charts below to estimate your load spectrum. For an exact means of calculating your load spectrum, refer to FEM 9.511 "Classification of Mechanisms".

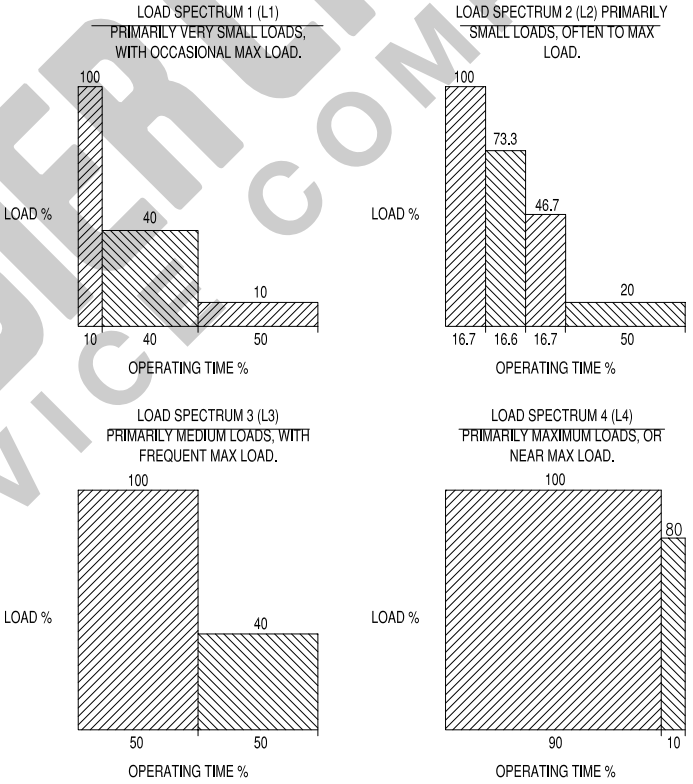

Once the average daily operating time, "t", is calculated for a specific application, the Class of Operating Time can be identified. Using the Class of Operating Time along with the Load Spectrum, one can determine the duty classification requirement of the application. Defining the proposed equipment usage in this manner is critical to selecting the correct hoist for the application.

Classification of Mechanisms

Load Spectrum	Class of Operating Time				
	T2	T3	T4	T5	T6
	Average Daily Operating Time (hr/day)				
	¼ – ½	½ – 1	1 – 2	2 – 4	4 – 8
L1	1Dm	1Cm	1Bm	1Am	2m
L2	1Cm	1Bm	1Am	2m	3m
L3	1Bm	1Am	2m	3m	4m
L4	1Am	2m	3m	4m	5m

MOSER CRANE COMPANY SERVICE

Example:

An application requires that a hoist be used to repeatedly lift and move small to medium size loads, but occasionally will be required to lift heavy loads equal to 5 metric tonne. This hoist will be operated daily for a single 8-hour shift and will be required to perform 15 lifting cycles per hour. The average height, which the load is lifted, is 18ft at a desired speed of 20ft/min.

The average daily operating time can be calculated from the above information:

$$t = \frac{2 \times 18 \times 15 \times 8}{20 \times 60} = 3.6\ \textbf{\textit{hr/day}}$$

The description of the example application implies that the load spectrum is likely an L1 or L2. Choosing an L2 load spectrum factor and using the calculated average daily operating time, one can determine from the "Classification of Mechanisms" table above, the duty classification for this application is 2m for a 5 metric ton rated hoist.

For a more thorough explanation of the determination of mechanism classification, refer to FEM 9.511 "Classification of Mechanisms".

Your SHAWBOX World Series hoist was designed to meet the duty classifications as described above. The standard 5t, 10t and 15t capacity models are rated at 2m duty classification, while the 7.5t capacity model is rated at 3m duty classification.

2 part reeved models @ 2-1/2, 5, and 7-1/2 tonne capacity are rated at 2m duty classification, while the 3-3/4 tonne model is rated at 3m duty classification.

SECTION II - INSTALLATION

2-1. GENERAL.

SHAWBOX World Series electric hoists are lubricated and tested before being shipped from the factory. To place a hoist in service, install onto beam by adjusting appropriately for the flange width, connect to electrical service and perform pre-operation tests and checks.

⚠ WARNING

Only qualified personnel with proper supervision shall install the hoist on the monorail and perform the final pre-operation inspection.

⚠ WARNING

Working in or near exposed energized electrical equipment presents the danger of electric shock.

TO AVOID INJURY:

DISCONNECT POWER AND IMPLEMENT LOCKOUT/ TAGOUT PROCEDURE BEFORE REMOVING COVER OR SERVICING THIS EQUIPMENT.

2-2. INSTALLING HOIST

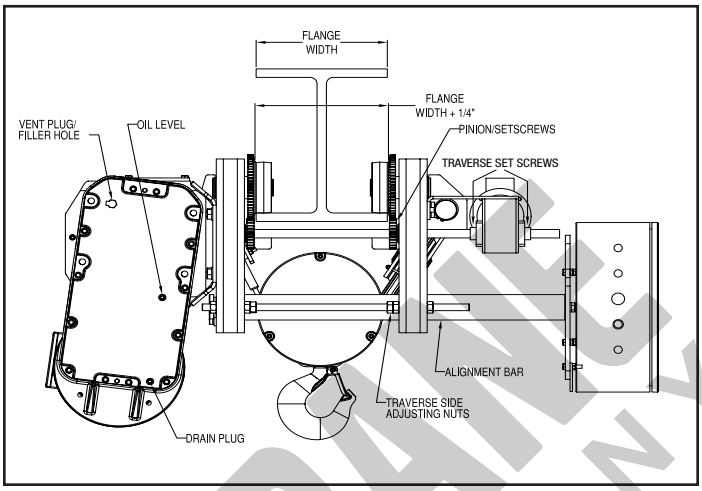

Figure 2-1. Trolley Wheel Spacing ("B" & "C" Frame Shown)

OPEN-END BEAM:

If the trolley can be installed directly from the end of the supporting beam, adjust the spacing between the trolley wheel flanges to be 3/16"-1/4" greater than the exact width of the beam flange (See Figure 2-1). Before adjusting the width of the trolley frame, make sure to loosen the pinion set screws nearest the traverse drive on the keyed cross shaft and those on the traverse reducer. Do not lose the keys for the pinion and reducer during adjustment. Also, the electrical conduit/cable must not be constrained when attempting to adjust the trolley sides, in or out. The trolley width is adjusted by loosening the jam nuts on the traverse drive side of the threaded rods at each end of the hoist. If necessary, lubricate the frame alignment bars with penetrating oil before attempting to adjust trolley width. The trolley side may then be pushed or driven into position by turning the adjusting nuts on the threaded rods. Adjust nuts on each side of the hoist simultaneously, to avoid binding. After adjusting the trolley to the proper width, tighten all adjusting nuts and setscrews, and re-secure the electrical conduit/cable. Verify that the geared wheels mesh properly with the traverse drive pinions. Using proper equipment, carefully lift the hoist and install on the end of the beam. Lubricate the wheel gear and pinion (WG, Section IV, Paragraph 4-5).

When hoists are adjusted or repaired in the field, all set screws must return to the original settings from the manufacturer. This is done by following the below instructions:

1) Apply Loctite 242 to the threads and install the setscrews back into the proper location

2) Tighten setscrews for the traverse pinion gear down onto the key and shaft to 70 in-lbs before beginning the use of the hoist

NOTICE

Loosen all electrical cable or conduit attached to the frame and alignment bars before adjusting trolley width. Ensure that the electrical cable is not stretched, pinched, twisted or otherwise damaged when adjusting trolley width.

CLOSE-END BEAM:

For trolleys which are to be mounted along the span of a beam not having open ends, the trolley must be adjusted in the same manner as described above to a width that allows clearance between the axle ends and the beam flange. Using proper lifting equipment, the trolley and hoist must then be lifted to the beam where it is to be installed. Once in position, adjust the spacing between the trolley wheel flanges to be 3/16"-1/4"" greater than the exact width of the beam flange (See Figure 2-1). After tightening all adjusting bolts, set screws, and all electrical conduit/cable clamps, carefully set the trolley on the beam. Lubricate the wheel gear and pinion (WG, Section IV, Paragraph 4-5).

HOUSTON CRANE SERVICE COMPANY

2-3. CONNECTING HOIST TO ELECTRICAL SERVICE

Electrical service to the hoist may be power cable or a guarded system having sliding shoe or wheel type collectors.

Follow ANSI/NFPA 70, state, and local electrical codes including the grounding provisions thereof when providing electrical service to the hoist.

Make electrical connections using the appropriate wiring diagrams furnished with the hoist. Only qualified journeyman electricians shall make any electrical connections, including connections to collectors or power cord.

⚠ WARNING

Be certain that electrical power supply is OFF and locked in the open position before attempting any electrical connections to the hoist. This equipment must be effectively grounded according to the National Electric Code ANSI/NFPA 70, or other applicable codes.

⚠ CAUTION

Power supply to hoist and trolley must be the same voltage, frequency, and phase that are specified on the hoist and trolley nameplate.

2-4. PRE-OPERATIONAL CHECKS

a) Check Oil Level. (Figure 2-1) The gearcase has been filled with oil to the proper level. However, this should be rechecked before operating the hoist.

Check oil level by removing the Oil Level Plug indicated in Figure 2-1. When properly filled, oil should be level with the bottom of the tapped hole. Fill to this level with oil as specified in Paragraph 4-2.e.

b) Check all connections for tightness of bolts, inclusion of lock washers or other type fasteners to ensure correct components have been used. This check must be made for all connections: mechanical, structural and electrical, including both field and factory-made connections.

c) Check to ensure that all shipping supports, tie-downs, brackets or other items used only for shipping or storage purposes are removed from the equipment.

d) Check Push Button Operation and Phasing. To properly check the phase of the hoist, follow these steps:

(1) With "POWER OFF", operate all the push buttons and determine that they do not bind or stick in any position.

⚠ WARNING

If any push button binds or sticks in any position - DO NOT TURN POWER ON - determine the cause and correct the malfunction before operating.

(2) Connect hoist to power source.

(3) Operate "UP" button briefly to determine direction of hook travel.

(4) If hook raises when "UP" button is depressed, phasing is correct.

(5) If hook lowers when "UP" button is depressed, hoist is "Reverse Phased." TURN AND LOCK POWER OFF and check the pushbutton wiring. If the pushbutton was wired properly, correct the problem by interchanging any two leads at power source connection. Do not change internal wiring of hoist.

⚠ WARNING

On three phase hoists, it is possible to have "Reverse Phasing" causing the block to lower when the "UP" button is depressed. When this condition exists, the automatic limit switch is inoperative and hoist operation will be dangerous.

e) Check Lower Block and Hoisting Cable. Depress "DN" push button and run lower block to its lowest position. No less than two wraps shall remain on the drum with the loaded hook in its lowest position. Also check to see that the lower block and rope do not twist excessively. If it does twist to the extent that two ropes rub against each other, disengage the swaged rope end from the frame anchor and twist the rope four or five turns in a direction opposite to that which the block turns. Reconnect rope to the frame anchor, holding firmly to eliminate rope twisting back to its original position. Operate hoist up and down a few times. If lower block still rotates excessively, repeat process until twisting is corrected.

f) Lubricate Hoisting Cable. For longer cable life, it is recommended that the cable be lubricated at time of installation by applying a heavy coating of lubricant CL (Para. 4-7) as outlined in SECTION IV, Paragraph 4-3.

g) Check Limit Switch Operation.

(1) A geared rotary type upper and lower limit switch is provided as standard equipment on SHAWBOX World Series hoists. This switch is adjustable and although preset by the factory, it should be adjusted at time of installation to the desired high and low limits of lower block travel. Refer to SECTION VII, Paragraph 7-3.

(2) A block operated upper limit switch is furnished on SHAWBOX World Series hoists. This limit stop is factory set to stop the lower block at the safest high position, guarding against over travel and possible damage to hoist. Minimal adjustments can be made. When equipped with this option, the hoist should be tested by jogging the lower block against the limit switch actuator arm to assure the switch is functioning properly. When the lower block lifts the actuator,
"the hoist will automatically stop. If the lower block coasts through the limit switch when lifting, a reversing switch will automatically close and reverse direction of motion to lowering.

h) An overcapacity limit switch is provided as standard equipment on SHAWBOX World Series hoists. This switch is adjustable and although preset by the factory, it should be adjusted at the time of installation to the desired setting. Refer to SECTION VII, Paragraph 7-4.

i) When first using the hoist and trolley, operate with lighter loads through full travel before applying maximum load.

HOSEMAN SERVICE COMPANY

⚠ WARNING

Damage to the hoist, a dropped load, and injury may result if limit switches fail due to improper use.

TO AVOID INJURY:

UNDER NORMAL OPERATING CONDITIONS, STOP HOIST TRAVEL BEFORE ENGAGING LIMIT SWITCHES. LIMIT SWITCHES ARE SAFETY DEVICES AND SHOULD NOT BE USED AS NORMAL OPERATING CONTROL.

⚠ WARNING

Some hoists may be shipped with the electrical controls loose (disconnected) and will not have the upper and lower limit switches connected. DO NOT OPERATE HOIST UNTIL LIMIT SWITCHES ARE PROPERLY CONNECTED AND ADJUSTED. Failure to do so may allow hoist to be operated beyond proper travel limits, which can cause load to drop, resulting in damage to equipment or injury.

SECTION III - OPERATION

3-1. GENERAL.

Operation of SHAWBOX World Series hoists is controlled by a convenient pendant push button station. With it, the hoist can be controlled to give fast lifting and lowering; or controlled to lift or lower the load in small increments, providing accurate positioning capability. The push button station has a built-in interlock to prevent depressing opposing buttons simultaneously.

When first using the hoist, break in by operating under lighter loads to full travel before applying maximum load.

3-2. PUSH BUTTON OPERATION

a.) For the hoist motion depress push button marked "UP" to raise load.

b.) For the hoist motion depress push button marked "DN" to lower load.

c.) For the trolley traverse motion:

With two speed control depress buttons marked "<<" , ">>" or "N", "S" to activate the trolley traverse motion

With one speed control depress buttons marked "<" , ">" or "N", "S" to activate the trolley traverse motion.

d.) On two-speed hoist or trolley motions, partial depression of a button operates hoist or trolley at slow speed; depressing button completely operates hoist or trolley at full speed.

⚠ CAUTION

Excessive "jogging" will cause premature burning of contact tips, motor overheating and premature brake wear.

3-3. OPERATING PRECAUTIONS.

Safe operation of an overhead hoist is the operator's responsibility. Listed below are some basic rules that can make an operator aware of dangerous practices to avoid and precautions to take for his own safety and the safety of others. Observance of these rules, in addition to frequent examinations and periodic inspection of the equipment, may save injury to personnel and damage to equipment.

⚠ CAUTION

Equipment covered herein is not designed or suitable as a power source for lifting or lowering persons.

a) **DO** read applicable sections of FEM Section IX, Series Lifting Equipment and the Operation, Service and Parts Manual.

b) **DO** be familiar with hoist operating controls, procedures, and warnings.

c) **DO** make sure hook travel is in the same direction as shown on the controls. If opposite direction occurs, see Pre-Operation Checks, Section II, Paragraph 2-4.b.

d) **DO** make sure hoist limit switches function properly.

e) **DO** maintain firm footing when operating hoist.

f) **DO** make sure that the load slings or other approved attachments are properly sized and seated in the hook saddle.

g) **DO** make sure that the hook latch is closed and not supporting the load.

h) **DO** make sure that load is free to move and will clear all obstructions.

i) **DO** take up slack carefully, check load balance, lift a few inches and check load's holding action before continuing.

j) **DO** avoid swinging of load or load hook.

k) **DO** make sure that all persons stay clear of the suspended load.

l) **DO** warn personnel of an approaching load.

m) **DO** protect wire rope from weld splatter or other damaging contaminants.

n) **DO** promptly report any malfunction, unusual performance, or damage of the hoist.

o) **DO** inspect hoist regularly, replace damaged or worn parts, and keep appropriate records of maintenance.

p) **DO** use the hoist manufacturer's recommended parts when repairing a hoist.

q) **DO** use hook latches.

r) **DO** apply lubricant to the wire rope as recommended.

s) **DO NOT** lift more than rated load.

t) **DO NOT** use the hoist load-limiting device to measure the load.

u) **DO NOT** use damaged hoist or hoist that is not working properly.

v) **DO NOT** use the hoist with twisted, kinked, damaged, or worn wire rope.

w) **DO NOT** lift a load unless wire rope is properly seated in its groove(s).

x) **DO NOT** use wire rope as a sling or wrap rope around the load.

HOOSIER CRANE SERVICE COMPANY

y) **DO NOT** lift a load if any binding prevents equal loading on all supporting ropes.

z) **DO NOT** apply the load to the tip of the hook.

aa) **DO NOT** operate unless load is centered under hoist.

bb) **DO NOT** allow your attention to be diverted from operating the hoist.

cc) **DO NOT** operate the hoist beyond limits of wire rope travel.

dd) **DO NOT** use limit switches as routine operating stops unless recommended. They are emergency devices only.

ee) **DO NOT** use hoist to lift, support, or transport people.

ff) **DO NOT** lift loads over people.

gg) **DO NOT** leave a suspended load unattended unless specific precautions have been taken.

hh) **DO NOT** allow sharp contact between two hoists or between hoist and obstructions.

ii) **DO NOT** allow the rope or hook to be used as a ground for welding.

jj) **DO NOT** allow the rope or hook to be touched by a live welding electrode.

kk) **DO NOT** remove or obscure the warnings on the hoist.

ll) **DO NOT** adjust or repair a hoist unless qualified to perform hoist maintenance.

mm) **DO NOT** attempt to lengthen the wire rope or repair damaged wire rope.

nn) **DO NOT** allow personnel not physically fit or properly qualified, to operate hoist.

oo) **DO NOT** operate hoists unless hook moves in the same direction as indicated on the push button. If opposite direction occurs, see pre-operation checks, Section II Paragraph 2-4.b.

pp) **DO NOT** operate hoist unless limit switches are operating properly.

qq) **DO** avoid operating hoist when hook is not centered under hoist. Avoid side pulls and swinging of load or load hook when traveling hoist.

rr) **DO** operate hoist within recommended duty cycle and **DO NOT** "jog" unnecessarily.

ss) **DO** conduct regular visual inspections for signs of damage and wear.

tt) **DO NOT** operate hoist with hooks that have opened up. See Section V, Paragraph 5-2.f.

uu) **DO** provide supporting structure that has an appropriate design factor based on the load rating and dead weight of the hoist. If in doubt of the supporting structure's strength, consult a structural engineer.

⚠ WARNING

DO NOT operate hoist with the hoisting rope out of the drum grooves. Such operation may result in damage to the rope guide and rope and could result in the rope breaking. This may result in dropping the load that can cause damage to equipment and injury to operator or other personnel. Hoist rope will remain in the drum grooves during operation under normal operating conditions, however, slack or kinked rope, excessive side pulls, swinging or jerking of load, or similar abuse, may cause damage to the rope guide causing the rope to leave the grooves.

vv) **DO NOT** use hoist in location that will not allow operator movement to be free of the load.

ww) **DO**, when starting to lift, move the load a few inches at which time the hoist should be checked for proper load holding action. The operation shall be continued only after the operator is assured that the hoist is operating properly and that the load is supported in the center of the base bowl/saddle of the hook.

xx) **DO** observe recommended inspection and maintenance procedures.

yy) **DO** use common sense and best judgment whenever operating a hoist.

zz) **DO NOT** remove drop lugs. Removal will create an unsafe operating condition.

aaa) **DO NOT** lift guided loads.

SECTION IV - LUBRICATION

4-1. GENERAL.

The lubrication services outlined in Paragraphs 4-3 thru 4-6 should be performed before initial operation of the hoist. The lubrication services outlined in Paragraphs 4-2 thru 4-6 should be performed at regular intervals at least every six (6) months, coinciding with spring and fall seasons is recommended. The reason for this is that on hoists installed outside or in unheated areas a "cold test" oil is required in such (below freezing) climates making seasonal changes necessary.

4-2. CHANGING GEARCASE OIL

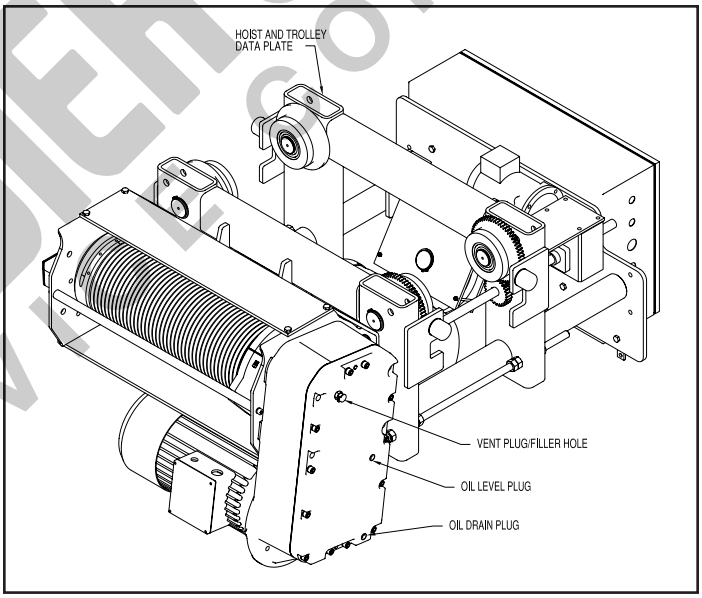

Figure 4-1. View of Hoist Showing Location of Name Plates and Oil Plugs ("B" & "C" Frame Shown)

a) Add 5% solution of Mobilsol A (or equivalent) to the oil and run for a short time. This will clean components and hold particles in suspension for draining.

b) Remove oil drain plug from bottom of gearcase and drain oil out. Dispose of oil in accordance with local environmental codes.

⚠ WARNING

Avoid skin contact with Mobilsol A. In case of skin contact: dry wipe the skin, cleanse the area with a waterless hand cleaner and follow by washing thoroughly with soap and water.

HOOSIER CRANE SERVICE COMPANY

c) Reinstall drain plug.

d) Remove oil level plug from front of gearcase cover.

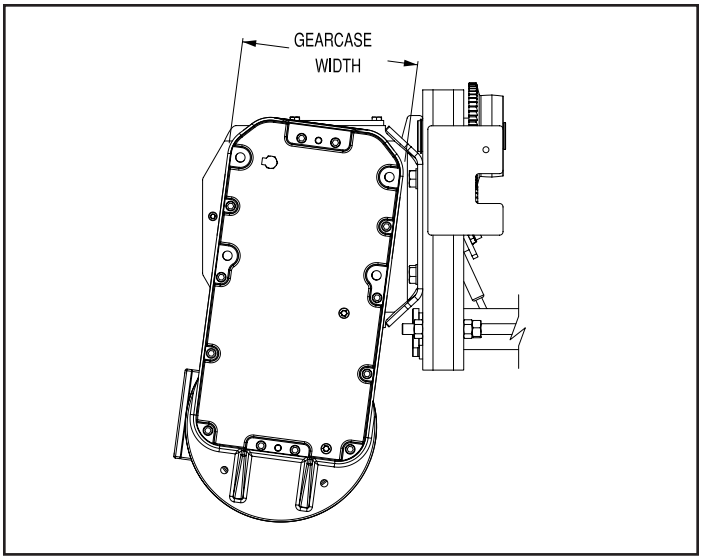

Figure 4-2. Gearcase Width Illustration

e) Refill through filler hole to proper level (bottom of oil level plug hole) using GCOH (Paragraph 4-7). The amount of oil required depends on the overall size of the gearcase; three sizes are used for World Series hoists. To determine size and amount of oil to add, measure the width of hoist gearcase (see Figure 4-2). The "B" Frame measures 9-3/4" wide and requires approximately 5 quarts of oil. The "C" Frame measures 12-1/2" and requires approximately 11 quarts of oil. The "D" Frame measures 17" and requires approximately 12 quarts of oil.

4-3. LUBRICATION OF HOISTING CABLE.

Hoists are shipped from the factory without an exterior coating of grease on hoisting cable. It is recommended that the cable be thoroughly coated at installation and kept well lubricated with CL (Paragraph 4-7).

4-4. LUBRICATION OF LIMIT SWITCH.

Provide a light film of grease MPG (Paragraph 4-7) on bevel gear of rotary geared limit switch.

4-5. LUBRICATION OF GEARED TROLLEY WHEELS AND PINIONS.

At installation and periodically, apply grease WG (Paragraph 4-7) to the traverse drive pinions and the gears of the trolley wheels.

4-6. LUBRICATION OF ROPE GUIDE

a) Maintenance. The rope guide is made of a molded self-lubricated reinforced nylon material. It is lubricated prior to installation at the factory and requires only periodic inspection.

(1) Periodically re-grease with MPG (Paragraph 4-7) by applying grease to the leading edge of the guide and rope drum.

(2) Every 6 months, the rope guide should be removed per Section V, Paragraph 5-5, cleaned and inspected. When reassembled, the rope guide should be thoroughly greased with MPG (Paragraph 4-7) and the hoist run up and down to lubricate both the drum and the wire rope.

NOTES

HOOSIER CRANE SERVICE COMPANY

4.7 LUBRICANT SPECIFICATIONS		AMBIENT TEMPERATURE		
		-20° to +50° F (-29 to +10°C)	50° to 125° F (10° to 52°C)	125° to 250°F (52° to 121°C)
GCOH	AGMA Lubricant	No. 6	No. 7 EP	No. 7
Gear Case Oil Hoise Gearcase	Viscosity @ 100° F	1335-1632 SUS	1919-2346 SUS	1919-2346 SUS
	Viscocity Index	154	95	158
	Pour Point	-40° F	20°F	-37°F
	Mobil® Oil Corp	Mobil® SHC 632	Mobilgear® 600, XP-460	Mobil® SHC 634
	Shell® Oil Corp	Omala® RL 320	Omala ® 460	Omala® RL 460
	Texaco® Inc.	Pinnacle® 320	Meropa® 460	Pinnacle® 460
SG	NLGI Grease	No.1		
Spline Grease	ASTM D217 Worked Penetration	310-340		
	Dropping Point	320°F (160°C)		
	Base	Lithium		
	Mobile® Oil Corp.	---------- Mobilux® EP 111 ----------		
WG	Viscocity @ 100° F	25,000 SUS (contains diluent)		
Wheel Gear and Pinion Grease	Mobil® Oil Corp.	---------- Molitac® 375 NC ----------		
	Texaco® Inc.	---------- Crater H® ----------		
CL	No Specification			
Cable Lubricant Wire Rope Lubricant	Amoco® Oil Co.	---------- Amovis® 5-X ----------		
	Mobil® Oil Corp.	---------- Mobilarma® 798 ----------		
	Sun® Oil Corp.	---------- Sunoco® Wire Robe Lubricant ----------		
	Texaco® Inc.	Crater A	Texclad® 2	
GO	AGMA Lubricant	No. 1	No. 2	
General Oil General Oiling to Prevent Rusting an Provide Limited Lubrication for Points Not Considered Normal Wear Points	Viscosity @ 100° F	193-235 SUS	284-347 SUS	
	Viscosity Index	60 Min.	60 Min.	
	Pour Point	-20°F (-29°C)	10°F (-12°C)	
	Amoco® Oil Co.	Rykon® Oil 46	American Industrial Oil® 68	
	Mobil® Oil Corp.	----------Mobil® DTE Oil Heavy----------		
	Shell® Oil Co.	Rotella® 10W	Rotella® 10W-30	
	Sun® Oil Co.	Sunvis® 932	Sunvis® 968	
	Texaco® Oil Inc.	Rando® Oil 46	Rando® Oil 68	
MPG	NLGI Grease	No.1	No. 2	
Multipurpose Grease Grease Lubricated Wear Points Provided	6ASTM Worked Penetration	310-340	265-295	
	Dropping Point	360°F (182°C)	360°F (182°C)	
	Base	Lithium	Lithium	
	Amoco® Oil Co.	Amolith® Grease 1 EP	Amolith® Grease No. 2 EP	
	Mobil® Oil Corp.	Mobilith® AW1	Mobilith® AW 2	
	Shell® Oil Co.	----------Retinax LC----------		
	Sun® Oil Co.	Presitge® 741 EP	Sunoco® Multipurpose 2	
	Texaco Oil Inc.	Multifak® EP 1	Multifak® EP 2	
GCOT	AGMA Lubricant	No. 7 or 7C (Compounded)	No. 8 or 8C Compounded	Refer to SHAWBOX Hoist Field Service Department for Gearcase **Operating Temperatures** above **125° F**
Gear Case Oil Traverse Gear Case	ISO Viscosity Grade	460	680	
	Amoco® Oil Corp.	Worm Gear Oil	Cylinder #680	
	Mobil® Oil Corp.	Mobil® SHC 643 Synthetic, Mobil® 600W	Mobil® SHC 634 Sythetic, Extra Hecla Super	
	Shell® Oil Co.	Valvata® J460	Valvata ® J680	
	Texaco Oil Inc.	Meropa® 460	Meropa® 680	

INSIDER CRANE SERVICE COMPANY

SECTION V - INSPECTION AND PREVENTIVE MAINTENANCE

5-1. GENERAL.

All SHAWBOX World Series hoists are inspected and tested at the factory. Regular in-service inspection and preventative maintenance programs not only help reduce overall maintenance costs but may also prevent service shutdowns by forewarning of problems that could cause these shutdowns. Regular inspections, periodic minor adjustments, regular cleaning and lubrication and replacement of worn parts can help preserve good performance and operation of your hoist.

Many factors influence the inspection and preventative maintenance program required for your hoist. Frequency and severity of service and material handled, local environmental conditions and various applicable codes are some of the factors that the user must consider to adjust inspection and maintenance program outlined in this section to meet his specific conditions.

The inspection and maintenance intervals outlined in this section are considered a minimum. Recommended in the schedule are minimum inspection and maintenance intervals based on average daily use in a normal environment. Your SHAWBOX World Series hoist was designed to meet a specific duty classification as described by the FEM "Rules for the Design of Serial Lifting Equipment" and is to be used in accordance with the duty rating identified on the equipment nameplate. For more details regarding hoist duty cycles and average daily use, please reference FEM Section IX, Series Lifting Equipment or the Hoist Duty Classification page in this manual.

Environmental conditions in which the hoist operates are also important considerations for the user, when adjusting hoist inspection and maintenance programs to local conditions. Frequency of inspection and maintenance must be increased if hoist is subjected to severe atmospheric environmental conditions, such as corrosive vapors, extreme heat or cold, cement or dust and other airborne contaminants. The user should carefully consider all environmental conditions and adjust frequency and degree of maintenance for his local conditions. Consult the factory's Field Service Department for advice regarding unusual environmental conditions.

Various codes also regulate inspection and maintenance programs. Attention must be given to applicable federal standards, OSHA regulations, national standards, state and local codes which may include mandatory rules relating to hoist inspection and maintenance. The user should become familiar with all applicable codes for his area and be guided accordingly.

Listed on the Recommended Inspection and Maintenance Schedule are inspection frequencies and requirements. Perform these inspections regularly as scheduled and additional inspections as may be required for activity, service, and environment of your hoist. The hoist operator must be responsible for determining the operating conditions and severity of service.

Inspection Schedule and Maintenance Report Form.

Shown on page 12 of this manual is a recommended Inspection Schedule and Maintenance Report form that lists various components of the hoist. The form also includes trolley components, runway components, and miscellaneous items. This form is suggested as a guide for written inspection reports. Inspections are recommended each month and should be performed thoroughly enough to inform the hoist user of deficiencies for any item listed. This form does not supersede the Inspection and Maintenance Schedule listed on page 11 of this manual but may be used to record scheduled inspection and maintenance services required.

The user should revise the inspection interval, add additional units or provide a similar form to suit particular conditions that may exist. However, written, dated and signed inspection reports should be maintained particularly on critical items such as hoist hooks, hoisting rope, sheaves, drums and brakes. Periodic review of old inspection reports can point out service life of hoist components, forecasting need for adjustment, repair or replacement of these components.

As a matter of expedience, appointed maintenance personnel inspecting hoist can also take care of minor adjustments, repairs and cleaning, where required. Note column on Inspection Schedule and Maintenance Report form headed Corrective Action and Notes. When corrective action is made during inspection, note condition of part or unit as inspected in appropriate Condition column with a check mark (√). Note "during inspection" corrective action taken and date in space provided. In this manner, items requiring further attention will be checked (√) without showing corrective action. This will advise the person responsible for hoist operation and safety, or whoever reviews the inspection reports, that deficiencies exist. The designated person will check all deficiencies as listed and re-examine or otherwise determine whether they constitute a safety hazard.

⚠ WARNING

Deficiencies may be hazardous to personnel and equipment. Do not operate a hoist having deficiencies unless a designated qualified person has determined that these deficiencies DO NOT constitute a safety hazard.

Written, dated and signed inspection reports for many items are mandatory under OSHA regulations, and many state safety codes.

It is strongly recommended that the Inspection Schedule and Maintenance Report, shown herein, be completed by a qualified person designated with the responsibility for hoist operation and safety or an inspector appointed by this person.

Inspection records can point out the service life of hoist components and help forecast the need for adjustments, repairs, and ordering of replacement parts. File and review these reports after each inspection.

All SHAWBOX World Series hoists are equipped with a Pulse™ monitor, which is wired into the control circuit in the control enclosure. This equipment consists of a circuit board, a serial communications port, and onboard memory, which will retain data even when the hoist is removed from power. The Pulse monitor takes the "pulse" of the equipment by recording the most recent hoist activities including all normal operation events, motor starts, over-capacity lifts and thermal overload events. In addition, the monitor records the total cumulative operating time and motor starts for the life of the equipment. Each Pulse monitor is programmed with the equipment serial number at the factory.

Data may be downloaded from the monitor, via the serial communications link, by a certified technician. Pulse monitor data may be used to determine equipment usage and to verify that the application does not exceed the hoist duty rating as identified on the equipment nameplate. The data can also be helpful in establishing and scheduling preventative maintenance as well as an aid in troubleshooting the equipment. For additional information refer to the Pulse monitor manual (P/N 11817503) sent with this manual.

SHAW-BOX FACTORY SERVICE COMPANY

RECOMMENDED INSPECTION AND MAINTENANCE SCHEDULE	
TIME INTERVAL	**INSPECTION OR MAINTENANCE**
Daily or start of each shift (visual)	*Check operation of all functional mechanisms including limit switch operation, brakes and control. Check hoist cable for kinks, abrasions, corrosion or broken wires or evidence of improper spooling on drum. Inspect hooks, upper and lower blocks, and all load bearing components for damage.
1 Month	*HOIST CABLE - Inspect per Paragraph 5-6 and lubricate per Paragraph 4-3.
1–3 Months	*ELECTRICAL CONTROLS - Inspect per Paragraph 5-4. Check hoist gearcase oil level - add oil as required per Paragraph 4-2.e.
6 Months	*LOWER BLOCK -Inspect per Paragraph 5-2. *UPPER BLOCK -Inspect per Paragraph 5-3. *ROPE GUIDE-Inspect per Paragraph 5-5. *OVER-CAPACITY LIMIT SWITCH-Inspect per Paragraph 5-13. *BLOCK OPERATED LIMIT SWITCH-Inspect per Paragraph 5-12. Lubricate hoist cable per Paragraph 4-3. Lubricate upper and lower hook block, Lubricate outboard bearing cartridge at grease fitting, Add a light film of MPG grease to the bevel gear in the screw type limit switch per Paragraph 4-7.
Annually	*Complete inspection. Motor brake and actuating mechanisms inspected and adjusted per Paragraph 5-10. Inspect hooks with crack detecting procedures per Paragraph 5-2.

Hours of "On" Time			
Load Spectrum	Hoist Duty		
	2m	3m	
L1	12500	25000	*Complete inspection, disassembly and maintenance required. It is recommended that your SHAWBOX repair Station be contacted for this service.
L2	6300	12500	
L3	3200	6300	
L4	1600	3200	

NOTES

HOOSIER CRANE SERVICE COMPANY

INSPECTION SCHEDULE AND MAINTENANCE REPORT

HOIST SERIAL NO. (MFGRS) _____ **CUSTOMER CRANE IDENTITY NO.** _____

RATED LOAD _____ **LOCATION IN PLANT** _____

TYPE _____ **THIS INSPECTION IS MONTHLY ☐ ANNUAL ☐**

VOLTAGE _____ **SEMI-ANNUAL ☐**

INSPECTED BY: _____ **DATE** _____

Component, Unit Or Part and Location		* Recommended Inspection Interval			CONDITION (Check column best indicating contition when part or unit is inspected. Use note column to the right if condition is not listed below.)						Corrective Action Notes	
LOCATION	Component, Unit or Part	MONTHLY	SEMI-ANNUAL	ANNUAL	GOOD	ADJUSTMENT REQUIRED	REPAIR REQUIRED (Loose Parts or Wires)	REPLACEMENT REQUIRED (Worn or Damaged)	LUBRICATION REQUIRED (Low Oil or Grease, Rust or Corrosion)	CLEANING OR PAINTING REQUIRED	(Indicate corrective action taken during inspection and note date. For corrective action to be done after inspection, a designated person must determine that the existing deficiency does not constitute a safety hazard before allowing unit to operate. When corrective action is completed, describe and note date in this column.)	DATE
HOIST	Motor	○										
	Motor Brake	○										
	Mechanical Load Brake	○										
	Overload Clutch	○										
	Couplings	○										
	Gears, Shafts, & Bearings	○										
	Upper Block	○										
	Lower Block	○										
	Hook & Throat Opening	●		X							Record Hook Throat Opening	
	Hoist Rope	●										
	Rope Drum		○									
	Rope Guide		○									
	Guards	○										
	Limit Switch											
CONTROL STATION OR PUSH BUTTON	Pushbutton		○									
	Wiring		○									
TROLLEY	Motor	○										
	Brake (when so equipped)	○										
	Couplings	○										
	Gears, Shafts, & Bearings	○										
	Frame			○								
	Wheels		○									
	Bumpers		○									
	Guards		○									
	Conductors	○										
	Collectors	○										
RESISTORS	Hoist		○									
	Trolley		○									
RUNWAYS	Monorail Joints		○									
	Monorail		○									
	Main Conductors	○										
	Main Collectors	○										
MISC.	General Condition		○									
	Load Attachment Chains	●										
	Rope Slings & Connections	●										
	Change Gearcase Lub.			○								
	Grounding Faults		○									

*See text for DAILY & WEEKLY REQUIREMENTS. ● SIGNED & DATED REPORT REQUIRED – OSHA.
○ INSPECTION INTERVAL **X** MAGNETIC PARTICLE OR EQUIVALENT EXAMINATION REQUIRED.

Typical Inspection Schedule and Maintenance Report form.
User must adjust inspection interval and components to suit his individual conditions and usage.

HOOSIER CRANE SERVICE COMPANY

⚠ WARNING

Do not operate a hoist having unusual vibrations, sounds, or with anything visibly or otherwise wrong. Danger may be present that the hoist operator cannot see. Determine and correct the cause of unusual conditions and make certain hoist can be operated safely.

5-2. INSPECTION OF LOWER BLOCK Refer to the Section IX, Figure 9-4. Lower Block Assembly.

a) Check lubrication of all parts. Also lubricate the shank of the hook that passes through the crosshead. If the thrust bearing is removed, apply MPG grease (Section IV, Paragraph 4-7).

b) Check each sheave to insure rope groove is smooth and free from burrs, or other surface defects.

c) Check each sheave for freedom of rotation; replace bearings if defective.

d) Make certain that the spring pin holding the hook nut to the hook is securely in position.

e) If hook is equipped with a hook latch or rotational lock, check to determine that they are in good operating condition.

f) Check throat opening of the hook. (Refer to Figure 5-2.) It is recommended that upon receipt of the hoist, a measurement be made and recorded of the hook throat opening. OSHA regulations require that the hook be replaced if the throat opening exceeds 15 percent of the original opening, or if the hook is twisted more than 10 degrees from the unbent plane. We suggest that a gage block properly identified to the hoist, similar to the one shown in Figure 5-2, be made for each hook for use in these measurements.

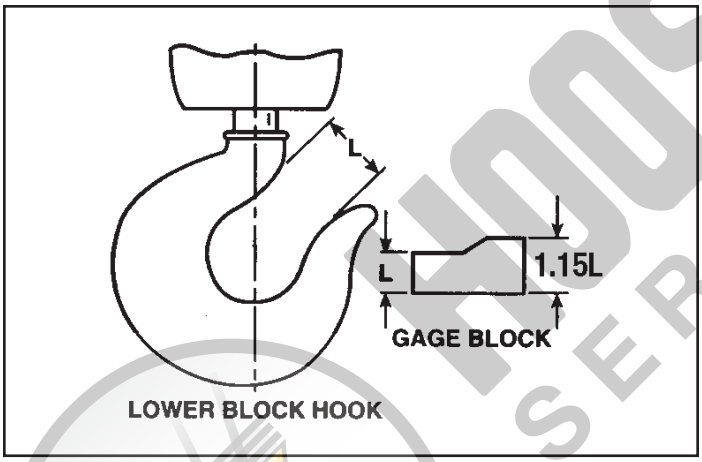

Figure 5-2. Gage Block

g) Hooks showing signs of cracks must be replaced. Hooks should be inspected at least once per year using dye penetrants, magnetic particle, or other suitable non destructive test methods.

h) Check wear of the hook, especially at the saddle and replace if worn more than 10% of original dimensions.

5-3. INSPECTION OF UPPER BLOCK Refer to the Section IX, Figure 9-5. Upper Block Assembly.

a) Check upper block sheaves for wear, damage and freedom of rotation. If sheaves do not rotate freely, disassemble block and inspect bearings. Replace worn or damaged bearings, washers, pins, or sheaves.

b) Make certain that all sheaves, bearing and hanger pins are free of foreign material. Bearings without grease fittings are lubricated for the life of the bearing and require no further lubrication.

c) Make certain that the rope retention bolts are not bent, loose or otherwise distorted; bolts must have close clearance to sheave flange to keep rope in sheave grooves.

5-4. INSPECTION OF ELECTRICAL CONTROLS

Arrangement of electrical control equipment varies with the type of control, physical space and the optional control features ordered with the hoist.

Note the location in the electrical enclosure of the control circuit fuse, transformer, limit stop switches and the hoist contactors. Trolley contactors and optional hoist and trolley fuses are also located in this enclosure.

Use wiring diagrams furnished with hoist to determine electrical components on your hoist; then determine component location and identity on your hoist.

⚠ WARNING

Be certain that main power switch is locked in open position (OFF) before opening hinged control enclosure cover mounted to the counterweight.

a) Open hinged control panel enclosure cover mounted to the counterweight and inspect wiring and terminals. Terminals should be securely crimped to wires and insulation sound. Terminal screws should be tight.

b) Check condition of contactor assembly, transformer, and upper limit switches.

5-5. INSPECTION OF ROPE GUIDE

a) General. The rope guide is intended to help prevent the rope from "back-winding" and to hold the rope in the proper groove. Side pulling and excessive load swing will severely damage the rope guide and must be avoided.

⚠ WARNING

Side pulling and excessive load swing will severely damage the rope and rope guide. Failure of these components may result in injury.

HOOSIER CRANE SERVICE COMPANY

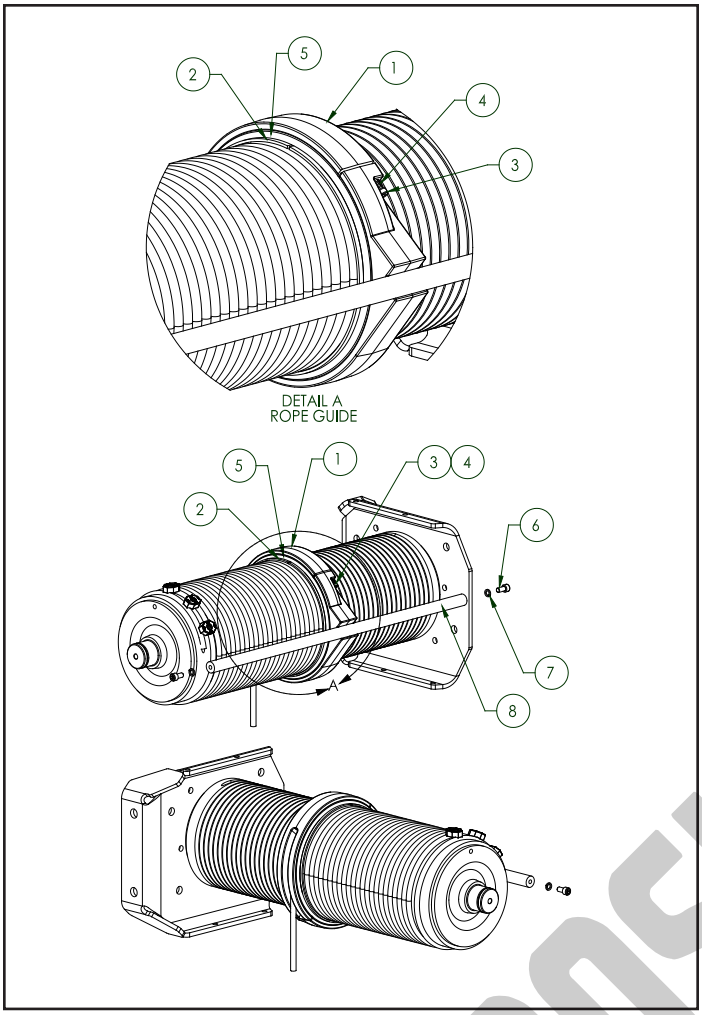

Figure 5-3a. Rope Guide Assembly ("B" & "C" Frame)

b) Disassembly for "B" & "C" Frame. Refer to Fig. 5-3a. For further assistance in locating components, refer to the parts list in Section IX.

(1) Remove socket head cap screws and lock washers (Items 6 and 7). Remove drum frame rod (Item 8).

(2) Remove shoulder bolts (Item 3) and compression springs (Item 4). The two halves of the rope guide body (Item 1) can now be pulled off the drum separately. When reassembling be sure that the half with the rope slot is on the top half of the drum.

⚠ WARNING

Once shoulder bolts are removed, the halves will separate and, if not properly supported, the halves could fall.

(3) Carefully unhook the rope tensioning spring (Item 5), which is under tension.

⚠ WARNING

The rope tensioning spring is under considerable tension; use caution when unhooking to avoid injury.

(4) Remove the split plastic shroud (Item 2) from the drum. When reassembling the rope guide, be sure the plastic shroud (Item 2) fits snugly in the rope guide body groove.

(5) Thoroughly clean and inspect all components.

(6) Follow steps in reverse to reassemble. Be sure to re-grease the rope guide with MPG (Paragraph 4-7), after assembling.

c) Disassembly for "D" Frame. Refer to Fig. 5-3b. For further assistance in locating components, refer to the parts list in Section IX.

(1) Remove hex head cap screws and lock washers (Items 1 and 2). Pull back on drum frame rod assembly (Item 3) until the free end pulls free of the gearcase end drum bracket.

(2) Slide the rope guide assembly (Item 4) off the end of the drum frame rod and remove from drum groove area. Note the required orientation of the rope guide assembly for re-installation.

(3) Thoroughly clean and inspect all components.

(4) Follow steps in reverse to re-install, paying attention to orientation and making sure to seat the assembly into the correct drum groove. Be sure to regrease the rope guide with MPG (Paragraph 4-7), after assembling.

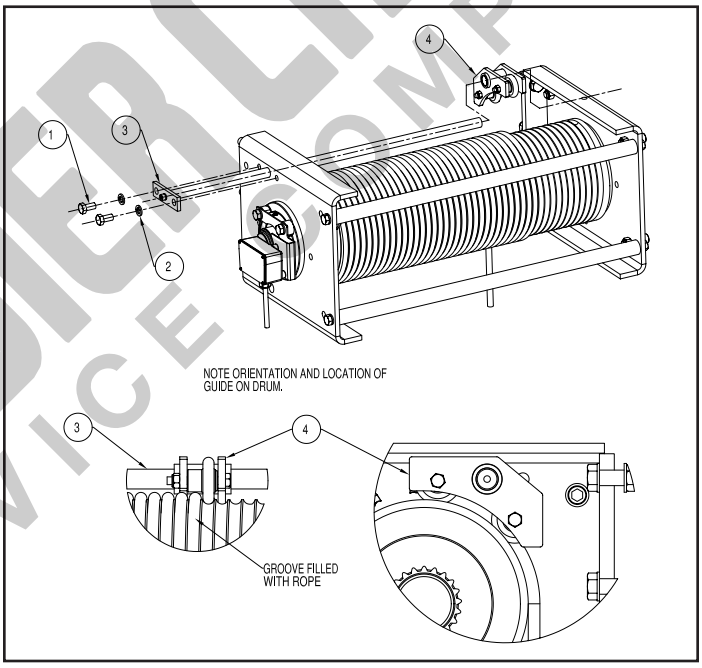

Figure 5-3b. Rope Guide Assembly ("D" Frame)

HOOSIER CRANE SERVICE COMPANY

5-6. ROPE INSPECTION, MAINTENANCE AND REPLACEMENT

⚠ WARNING

Wire Rope improperly handled or abused can create a SAFETY HAZARD. Read and comply with inspection, maintenance and replacement information given herein.

a) Inspection. Wire rope on your hoist is one of the most important components requiring frequent inspection and maintenance. All wire ropes will eventually deteriorate to a point where they are not safe and will require replacement. Wire rope should be thoroughly inspected at regular monthly intervals by an authorized person and a determination made when further use of the rope would constitute a safety hazard. Each inspection should include a written dated and signed report of rope condition. Reports should be filed and reviewed each month and any rope deterioration carefully noted. Inspections revealing, but not limited to the following conditions, should cause inspector to question remaining strength of rope and consider replacement. Inspections should take place at the most active sections of the rope, which may be identifiable through visual inspection of rope color. Ropes will wear more quickly in areas that are more frequently in contact with the running sheaves and drum.

(1) Replace wire rope if the number of visible broken wires exceeds 13 over a length of 6 times the nominal diameter (6d) or exceeds 26 wires over a length of 30d.

(2) Replace wire rope, if a complete strand has broken.

(3) Replace wire rope, if rope exhibits swelling, bruises, permanent bends, kinks, crushing, bird-caging or especially heavy wear.

(4) Replace wire rope, if rope has suffered heat damage from any cause.

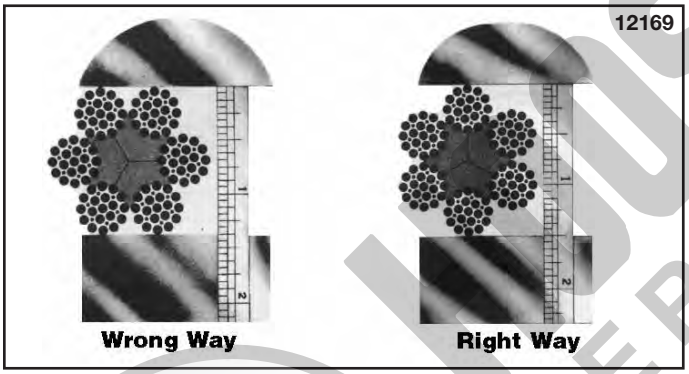

Figure 5-4. Correct Method of Measuring Rope

(5) Rope corrosion and/or rust formation, internal or external.

(6) Effects from improper lubrication.

(7) Rope being idle for one month or more due to shutdown or inactivity.

Special attention should be exercised when inspecting rope normally hidden during inspecting procedures.

Please refer to FEM Section IX, Series Lifting Equipment, namely Section 9.661, "Dimensions and Design of Rope Reeving Components" and ISO 4309, "Wire Ropes - Care, Maintenance, Installation, Examination and Discard", for illustrations and definitions when following the above guidelines for rope inspection.

b) Maintenance. Keep rope well lubricated to help reduce internal friction and prevent corrosion. Lubricant, as described in Paragraph 4-3, should be applied as a part of the regular maintenance program. Special attention is required to lubricate sections of rope over equalizing sheaves and other hidden areas.

Avoid dragging ropes in dirt or around sharp objects that will scrape, nick, crush, or induce sharp bends in the rope.

⚠ WARNING

Use only factory-approved rope with swaged wire rope socket.

c) Replacement. When recommended by an authorized inspector, the rope should be replaced. Replacement rope assemblies are shipped from the factory carefully coiled to prevent damage by kinking. Care must be taken to avoid twisting or kinking when uncoiling and handling during reeving.

Before replacing rope, check condition of grooves in sheaves and drums to determine if they are excessively worn.

When first using hoist after rope replacement, break in rope by operating under lighter loads to full travel before applying maximum load.

5-7. ROPE REEVING

a) General. Place reel on stand with shaft through the center of reel so rope can be pulled straight out with reel rotating.

⚠ CAUTION

It is imperative that rope reel or coil rotates as rope unwinds. If coil or reel does not rotate the wire will be twisted as it is uncoiled and kinking will result. A kinked rope may be damaged and unsafe for maximum service.

b) Before removing the old rope, refer to reeving diagrams, Figures 5-5 & 5-5a. To assist with re-reeving your hoist, refer to the appropriate reeving diagram and corresponding paragraph that describes the reeving procedure.

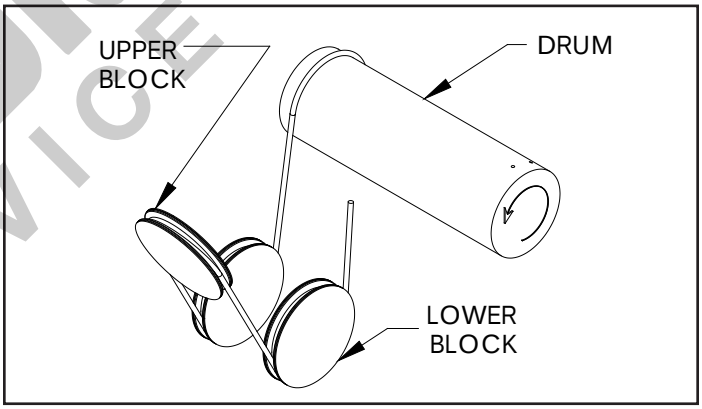

Figure 5-5 Reeving Diagram - 4 Part Single Reeved. (Note: Arrow on Drum Indicates Direction of Drum when Lowering.)

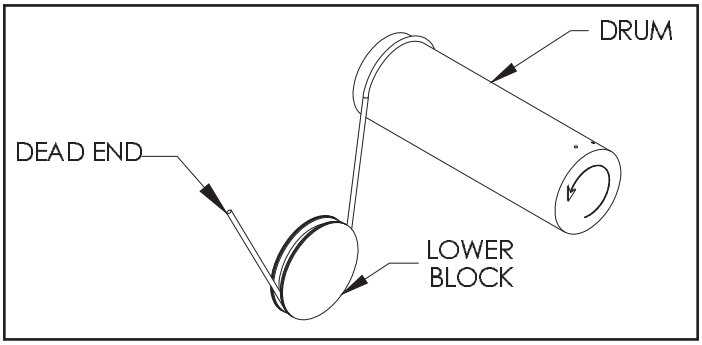

Figure 5-5a. Reeving Diagram - 2 Part Single Reeved. (Note: Arrow on Drum Indicates Direction of Drum when Lowering.)

HOISTCRANE SERVICE COMPANY

c) Removing old rope. Please refer to Section IX to assist in locating components referred to in the following paragraphs.

(1) Lower the lower block to a scaffold 6 to 7 feet below hoist to relieve tension on wire rope. (Lower block may be lowered to the floor if desired; however, to handle less weight and for ease of reeving, adequate scaffold below the hoist is recommended.)

⚠ CAUTION

Be certain all personnel are clear of hoist as components, hardware, and wire rope are removed from hoist.

(2) Remove the cap screws and hex nuts that retain the lower block sheave covers. Remove covers.

(3) Remove retaining rings from lower block sheave pin.

(4) Slide out lower block sheaves and remove wire rope.

(5) Remove two (2) rope retention bolts and nuts from upper block yoke.

(6) Remove one retaining ring on upper block to allow removal of upper block sheave pin.

(7) Securely grasp the upper block sheave before carefully sliding the sheave pin out. Note that two spacers will also be released as the pin is removed.

(8) Remove wire rope from sheave.

(9) Remove cotter pin from dead end anchor pin. Securely grasp the swaged wire rope before removing the pin.

(10) Remove rope guide per Section V, Paragraph 5-5.

(11) Make certain all personnel are clear of hoist and operate hoist "DN" to completely unwind all wire rope from drum. Stop hoist so all (3) rope clamps are accessible. Remove rope clamps and wire rope from drum.

NOTE

It may be necessary to adjust the geared limit switch in order to completely unwind all of the rope from the rope drum.

⚠ WARNING

Winding rope on rope drums with power can be hazardous. Keep hands safe distance from drum; wear gloves and use extreme care when winding rope.

d) Installing new rope.

(1) Thread rope to drum from trolley frame side then secure with rope clamps as follows:

(a) Make sure that the rope clamp groove size, as marked on top of the clamp above the groove, matches the rope size for your hoist (9mm on the "B" Frame, 12mm on the "C" Frame and 15mm on the "D" Frame).

(b) With the rope lying in the bottom of the drum groove, begin by tightening the rope clamp at the tail end of the rope. Torque the "B" and "C" Frame clamp to 25-30 ft-lbs. (34-40 N-m). Torque the "D" Frame clamp to 65-70 ft-lbs. (88-95 N-m).

(c) Applying tension to the rope and keeping it properly seated in the drum groove, install the remaining two clamps to the specified torque above.

(2) With all personnel clear of hoist - TURN ON POWER.

(3) Operate hoist "UP" guiding six (6) wraps of new rope into drum grooves with gloved hand.

(4) Reinstall rope guide over rope in rope drum grooves as shown in Figure 5-3a. & 5-3b. and outlined in Section V, Paragraph 5-5. Continue lubricating as rope is spooled onto the drum until about 28'-0" remain unwound.

(5) With outer lower block covers removed, thread the wire rope through the sheaves of the upper and lower block as shown in Figure 5-5.

(6) Attach swaged rope end to the dead end anchor pin and fasten with either the new cotter pin provided with the rope ("B" & "C" Frame) or the retaining rings provided with the hoist ("D" Frame).

(7) Replace the lower block sheave covers.

(8) Lubricate cable per Paragraph 4-3.

⚠ WARNING

Geared limit switch must be reset after replacing wire rope. Check limit switch operation carefully, without load, before placing hoist in service. SEVERE DAMAGE AND/OR A DROPPED LOAD COULD RESULT. Allow 3" for hook drift in both directions. Do not allow less than two (2) complete wraps of rope on drum with hook in lowest position.

⚠ WARNING

The hoist must be removed from service and placed on the ground for any maintenance that requires removal of the output shaft assembly or drum.

HOOSIER CRANE SERVICE COMPANY

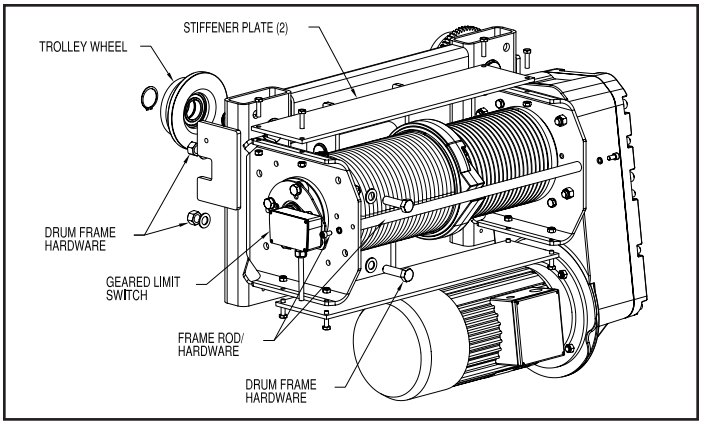

Figure 5-6. Drum Frame & Geared Limit Switch ("B" & "C" Frame Shown)

5-8. INSPECTION OF ROPE DRUM AND SHAFT

a) To remove the rope drum, remove the rope guide and hoisting cable, as outlined in Section V, Paragraphs 5-5 and 5-7.c., respectively.

b) Remove the geared limit switch or disconnect the wires so that the electrical cable will not inhibit removal of the drum. (see Figure 5-6).

c) Remove the hoist from the beam, place it on the ground and provide adequate means to support the drum before removing the frame rod cap screw(s) and stiffener plate hardware ("B" & "C" Frame only) at the outboard end drum frame (see Figure 5-6).

e) The hardware attaching the drum frame to the hoist and trolley frame may then be removed.

f) Keeping the drum level, remove the drum from the splined output shaft at the gear case end.

g) Inspect the gearcase output shaft and drum splines for wear.

h) Before re-assembling, by reversing above instructions, make sure to apply a liberal amount of SG (Paragraph 4-7) spline grease to both the output shaft and drum splines. Torque "B" Frame drum mounting bolts to 170 ft-lbs. (230 N-m) and the "C" and "D" Frame drum mounting bolts to 325 ft-lbs. (440 N-m).

5-9. INSPECTION OF HOIST GEARING

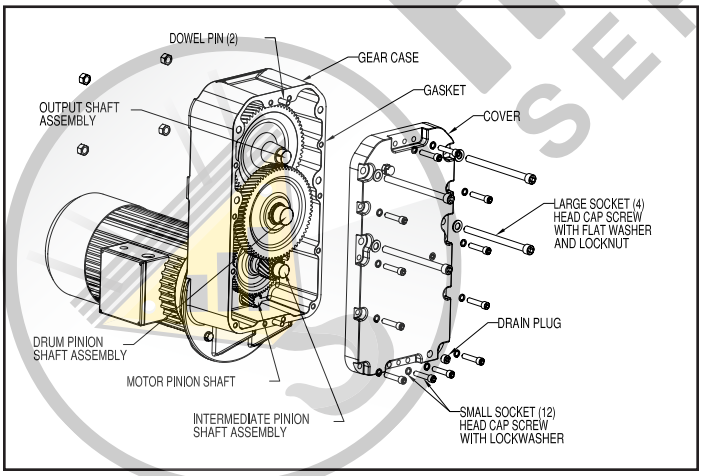

Figure 5-7. Hoist Gear Case Assembly ("B" & "C" Frame Shown)

a) General. The hoist gear case is a triple-reduction, splash lubricated, vertically split, cast aluminum case and cover. A helical gear train provides smooth and quiet hoisting operation. The gear shafts are supported with ball and roller bearings housed in the back of the case and in the cover. The input pinion is integrated onto the motor shaft. An oil seal housed in the gear case at the motor input seals the motor shaft as it passes into the gear case. Since the entire motor shaft is submerged in oil, anytime the motor is removed, the oil must be drained from the gear case. All pinions are integral with their shafts while the gears are keyed and pressed onto their shafts, with exception of the integral output shaft. The output shaft passes through an oil seal in the back of the gear case and drives the drum by means of a crowned spline. One end of the rope drum is supported on this output shaft.

b) Inspection and Disassembly.

Gearcase. (See Figure 5-7.)

(1) Lower hook block to the floor and relieve all load from ropes.

(2) Make sure power to hoist is off and locked out.

⚠ WARNING

Before disassembly, prevent rope drum from free spinning by wedging drum in place with a block of wood, and resting lower block on work surface so all weight is off rope drum. Rope may also be removed from hoist drum.

(3) Drain the oil from the gear case per Section IV, Paragraph 4-2.

(4) On the "B" and "C" Frame hoists, check to make sure that the two (2) hex bolts securing the gearcase to the drum frame bracket are in place and tightened securely. These bolts will be supporting the gearcase after the cover is removed.

On the "D" Frame hoist, the bolts supporting the gearcase are installed through tabs on the outside of the housing and do not pass through the cover. These bolts are not to be removed.

(5) Provide adequate means to support the gearcase cover. On the "B" and "C" Frame hoists, remove the four (4) socket head cap screws that protrude through the cover and gearcase. Remove the smaller socket head cap screws and lockwashers holding the cover to the gearcase. Carefully draw the cover directly away from the gearcase, as damage to this surface will prevent the gasket from sealing properly. If needed, lightly tap on the top and bottom cover tabs to release. As the cover is removed, ensure that all gear and shaft assemblies remain in the case and are fully supported by the gearcase bearings.

⚠ WARNING

If output shaft assembly is pulled out of the gear case with the cover, it will disengage from the drum allowing the drum to drop. Be certain all shaft assemblies stay in the case.

HOUSER CRANE SERVICE COMPANY

(6) If it is necessary to remove the output shaft assembly from the gear case, the rope drum must first be removed from the hoist. See Section V, Paragraph 5-8.

⚠ WARNING

The hoist must be removed from service and repaired on the ground for any maintenance that requires removal of the output shaft assembly or drum.

Only once the output shaft is free of the rope drum, can the output shaft assembly be safely removed from the gearcase. Provide an adequate means to support this shaft and gear assembly before removing, as it is heavy. The "B" Frame gear assembly weighs 27 lbs., the "C" Frame gear assembly weighs 55 lbs. and the "D" Frame hoist assembly weighs 120 lbs.

(7) The pinion shaft and gear assemblies may be removed as necessary.

(8) Inspect all gears, pinions, bearings, and the output shaft spline for wear, pitting, or mechanical damage. Replace as necessary. See Section IX, Figure 9-2 for replacement parts. It is recommended that gears and pinions only be replaced as sets. Thoroughly clean the output shaft external spline teeth before reassembly.

(9) Assembly is opposite of removal. Use a new gasket Do not attempt to assemble the cover to the gear case without a gasket, as the spacing between bearings will be reduced. Severe damage to the hoist will occur if no gasket or the wrong gasket is used. Refill gear case with new lubricant per Section IV, Paragraph 4-2 before use. Using SG (Paragraph 4-7), grease the spline teeth on the output shaft before reinstalling rope drum.

(10) Test hoist per Section V, Paragraph 5-14 to ensure proper lubrication.

Hoist Motor.

(1) Lower hook block to the floor and relieve all load from ropes.

(2) Make sure power to hoist is off and locked out.

(3) Drain the oil from the gear case per Section IV, Paragraph 4-2.

(4) Disconnect the wiring and conduit from the motor junction box.

(5) Provide a means to support the hoist motor. The "B" Frame motor weighs 95 lbs., the "C" Frame motor weighs 175 lbs. and the "D" Frame motor weighs 245 lbs. The motor must be adequately supported and held horizontally while removing and installing.

(6) Once the motor is properly supported, remove the hardware fastening it to the gear case. Carefully withdraw the motor horizontally straight out from the gear case. Do not tip or move the motor from side to side.

(7) Replace the motor shaft seal using an appropriate seal driver. It is recommended that a new seal be installed each time the motor is removed from the case.

IMPORTANT!

(8) Before reinstalling the motor, pack the gear teeth with **MPG** grease (Paragraph 4-7) and wrap the gear teeth with a number of layers of Teflon tape to protect the seal lip from being damaged by the gear teeth. Coat the seal lip and the motor shaft with **MPG** grease.

⚠ WARNING

Failure to use a factory replacement seal will cause premature seal failure due to specific lip material requirements that must be met.

(9) Install the motor to the gear case. The motor shaft must be in line with the seal bore and perpendicular to the mounting surface before attempting to insert the shaft through the seal. The motor shaft must remain horizontal and not rock up and down or side-to-side while installing the motor or seal damage will occur. It may be necessary to rotate the rope drum slightly to align the gear teeth to mesh with the teeth on the motor shaft. Ensure that the motor seats properly into the rabbet fit machined in the gear case. Fasten the motor to the gear case.

(10) Reconnect the conduit and power leads to the motor See Section VIII and refer to the specific wiring diagrams shipped with your hoist.

(11) Refill gear case with lubricant per Section IV, Paragraph 4-2.

(12) Test hoist to ensure proper operation per Section V, Paragraph 5-14.

5-10. INSPECTION OF MOTOR BRAKE AND ACTUATING MECHANISM

(1) ABM Motor Brake

a) General Operation. The hoist brake is an electro magnetically released, spring set non-adjustable brake. Torque is generated by compressing a friction disk between the stationary motor end bell and the spring loaded brake armature. The friction disk is fixed to and rotates with the motor shaft. When the magnet coil is energized, the armature plate is pulled across the air gap. The friction disk is carried by a splined hub that permits axial movement when the brake is released. This axial movement releases both sides of the friction disk from their mating stationary surfaces and allows the friction disk to rotate freely when the brake is energized. When power is removed from the magnetic coil, the compression springs push the armature against the friction disk and the other side of the friction disk against the motor end bell generating the torque necessary to stop the hoist machinery and hold the load.

It will be necessary to compensate for the friction disk wear when a greater amount of hook movement (drift) is noticed when stopping. There is no torque adjustment of the brake. Friction disk wear can only be compensated for by resetting air gap.

JOSEPH CHAIN SERVICE COMPANY

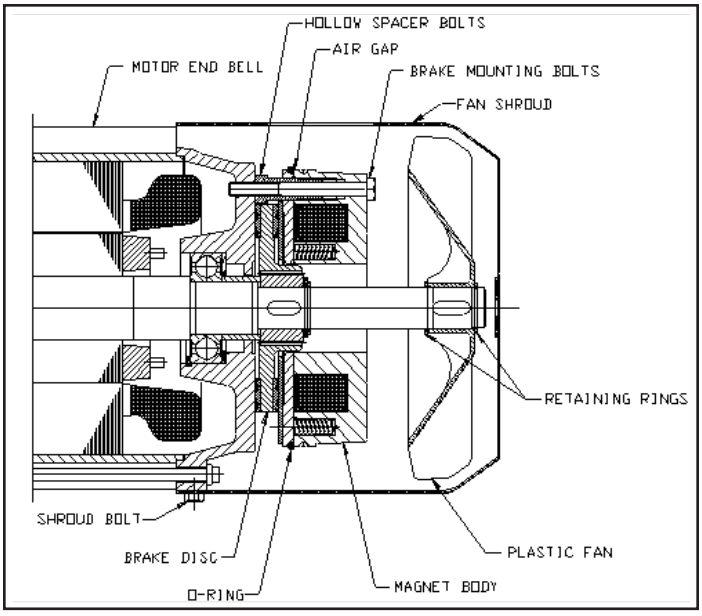

Figure 5-8a. ABM Motor Brake

b) Friction Disk Inspection and Air Gap Adjustment.

(1) Lower hook block to the floor and relieve all load from ropes.

(2) Make sure power to the hoist is off and locked out.

⚠ WARNING

Check to be certain main power switch is locked in open position (OFF), before removing fan shroud.

(3) Remove the four (4) bolts attaching the fan shroud to the motor and remove the fan shroud. See Figure 5-8.

(4) Carefully roll the large O-ring from the groove over the air gap back toward the magnet body. Do not excessively stretch this O-ring.

(5) Measure the air gap using feeler gages. If the air gap exceeds the maximum value shown in Table 5-1a, the air gap must be reset.

(6) To measure the thickness of the friction disk, it is necessary to remove the brake body from the motor end bell. Remove the three (3) brake mounting bolts and draw the brake body away from the friction disk. Carefully set the brake body down on the motor shaft directly in front of the fan. Draw the friction disk away from the end bell and measure the thickness across the friction surfaces. If the friction disk thickness is less than the minimum shown in Table 1, it must be replaced. See Section IX, Figure 9-8. If the friction disk thickness is within the allowable, reassemble the brake body to the motor end bell and torque the mounting bolts to the value shown in Table 5-1a. Whenever the friction disk is replaced, it is necessary to reset the air gap.

Hoist	"B" Frame	"C" Frame	"D" Frame
Mounting Bolt Torque	7.5 ft-lbs. (10 Nm)	18 ft-lbs. (25 Nm)	18 ft-lbs. (25 Nm)
Minimum Air Gap	0.012 in. (0.3 mm)	0.016 in. (0.4 mm)	0.016 in. (0.4 mm)
Maximum Air Gap	0.031 in. (0.8 mm)	0.043 in. (1.1 mm)	0.043 in. (1.1 mm)
Minimum Brake Disk Thickness	0.335 in. (8.5 mm)	0.472 in. (12.0 mm)	0.472 in. (12.0 mm)

Table 5-1a. ABM Motor Brake Data

(7) To reset the air gap, begin by releasing the (3) mounting bolts 1/2 turn. Turn the hollow spacer bolts into the magnet body approximately 1/4 turn. Retighten all three mounting screws. Measure the air gap at a minimum of three places around the circumference. Threading the hollow spacer bolts into the magnet body will decrease the air gap, while backing these spacer bolts out of the magnet body will increase the air gap. Repeat this step, as necessary, until the required air gap is achieved. The air gap must be the same all the way around the brake. Once the air gap is correct, torque the mounting bolts to the value shown in Table 5-1a.

(8) Replace the large O-ring over the air gap and reassemble the fan shroud to the motor. (9) Test hoist per Section V, Paragraph 5-14 to ensure proper brake operation.

c) Brake Disassembly.

(1) Lower hook block to the floor and relieve all load from ropes.

(2) Make sure power to the hoist is off and locked out.

(3) Remove the four (4) bolts attaching the fan shroud to the motor and remove the fan shroud. See Figure 5-8.

(4) Remove the snap ring behind the plastic fan. Carefully remove the fan and key from the motor shaft. Remove the snap ring in front of where the fan was mounted.

(5) Disconnect the two wires from the terminal block on the magnetic body.

(6) Remove the three mounting bolts that attach the brake body to the motor end bell and remove the brake body from the motor. Remove the friction disk from the motor shaft.

(7) Clean and inspect all components and working surfaces. Replace all damaged or worn components as necessary. Measure friction disk thickness and replace if less than the minimum thickness shown in Table 5-1a.

d) Brake Re-assembly.

(1) Install the friction disk on the splined hub. The friction disk must slide on the splined hub and seat against the end bell of the motor.

(2) Install the brake body to the motor end bell using the three (3) mounting bolts. The air gap must be reset as described in Section V, Paragraph 5-10.b. Torque the mounting bolts to the values shown in Table 5-1a. Install the large O-ring in the groove over the air gap. Ensure this O-ring is not pinched in the air gap.

(3) Connect the brake leads to the terminal block on the brake body.

(4) Install the forward fan mounting retaining ring and install the fan. Install the rear retaining ring. Install the fan shroud and bolts.

(5) Test hoist per Section V, Paragraph 5-14.

SHAW-BOX SERVICE COMPANY

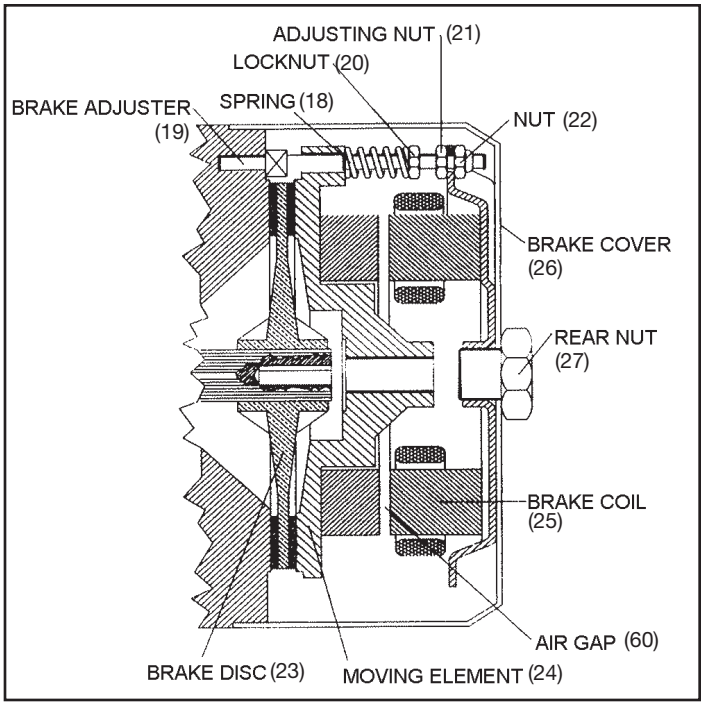

Figure 5-8b. MGM Motor Brake

(2) MGM Motor Brake

a) General Operation. The hoist brake is an electro magnetically released, spring set adjustable brake. Torque is generated by compressing a friction disk between the stationary motor end bell and the spring loaded brake armature. The friction disk is fixed to and rotates with the motor shaft. When the magnet coil is energized, the armature plate is pulled across the air gap. The friction disk is carried by a splined hub that permits axial movement when the brake is released. This axial movement releases both sides of the friction disk from their mating stationary surfaces and allows the friction disk to rotate freely when the brake is energized. When power is removed from the magnetic coil, the compression springs push the armature against the friction disk and the other side of the friction disk against the motor end bell generating the torque necessary to stop the hoist machinery and hold the load.

It will be necessary to compensate for the friction disk wear when a greater amount of hook movement (drift) is noticed when stopping. There is no torque adjustment of the brake. Friction disk wear can only be compensated for by resetting air gap.

Verify that all motor and brake supply terminals are properly tightened to the terminal board as well as the earthing terminal to the motor frame. As a result of normal wear of the brake disc lining, check that the air gap does not exceed the values shown on table 1. Please note that the brake linings wear is greater during the run-in. (few thousands stops). For the air gap adjustment, follow the instructions given into the paragraph "Air Gap Adjustment". Check the wear on both friction surfaces of the brake disc (on one side only for BAPV series) to be sure that their thickness is not less than 2 mm. Verify also that there are no damages on disc surfaces and in particular, in the hub toothing. (For replacement, refer to the paragraph "Brake Disc" Replacement"). For those brake disc with rivets on disc lining verify that braking surface has not reached the rivets; moreover check that no play should be between the brake disc and the brake disc hub in correspondence of the hub nails. Verify periodically that the braking torque is suitable. If needed, proceed to its adjustment as stated in the paragraph "Braking Torque Adjustment". Verify regularly the brake adjuster (19-42) wear conditions and their steady fastening on the rear cover brake surface (17). All brake assembly components, in particular the brake disc (23, 39-41 for BAF series, 45 for BAPV) and the brake adjusters (19, 42 for BAF-BAPV series) are subject to wear. In consideration of safety it's needed to replace them periodically. The replacement frequency comes from the motor duty (number of start/stop, applied moment of inertia, environment conditions and so on), we recommend however to replace them at least every 18 months. Periodically check and verify the shaft splines wear, exactly where the disc slides.

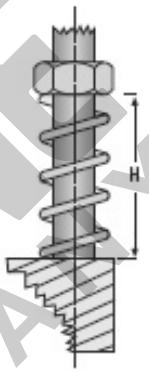

Braking Torque Adjustment. The brake torque is proportional to the spring (18) compression. The compression of the springs must be as uniform as possible. Spring height "H" must be maintained to ensure proper brake torque. As the friction disc wears, the spring height and air gap must be adjusted. To prevent damage to the brake, do not over compress the springs. If the brake coil (25) is not able to call the brake moving element (24) back with a quick stroke and keep it attracted without vibrations, verify the exact air gap adjustment and if this inconvenience still persists, loosen the locknut (20) and try it again until desired functioning is obtained. After every intervention please verify that "H" Dim is correct. Never exceed the maximum braking torque value stated on the motor name plate. It's recommended to avoid adjusting the braking torque to values lower than 30% of the maximum value.

Brake Disc Replacement. Loosen the rear nut (27), remove the end cover (26) and unscrew the locknuts (22). Take off the brake coil (25) from the brake adjusters (19), remove the nuts (20-21) and the springs (18). Remove the brake moving element (24) sliding it through the brake adjusters (19). Take off the old brake disc (23) and put in the new one. For re-assembling, proceed backwards. We recommend that the new brake disc must be handled with clean hands, because even a small trace of grease will decrease the braking performance and also increase noise. In the BAF series otherwise than in the BA series there are 2 brake discs (39-41) with an intermediate brake moving element (40) in between. After the brake coil (25) replacement, proceed to the air gap adjustment (see the pertinent paragraph). For the flywheel (45) replacement on the BAPV series, follow up the specific instructions.

Hoist	"B" Frame	"C" Frame	"D" Frame
Brake Adjuster Stud Torque	16.96 ft-lbs. (23 Nm)	16.96 ft-lbs. (23 Nm)	16.96 ft-lbs. (23 Nm)
Minimum Air Gap	0.016 in. (0.4 mm)	0.016 in. (0.4 mm)	0.016 in. (0.4 mm)
Maximum Air Gap	0.031 in. (0.8 mm)	0.031 in. (0.8 mm)	0.031 in. (0.8 mm)
Minimum Brake Disk Thickness	0.079 in. (2 mm)	0.079 in. (2 mm)	0.079 in. (2 mm)
Spring Height "H"	0.63 in. (16 mm)	0.70 in. (17.75 mm)	0.68 in. (17.25 mm)

Table 5-1b. MGM Motor Brake

HOOSIER CRANE SERVICE COMPANY

Brake Coil Replacement. Loosen the rear nut (27), remove the end cover (26), disconnect the brake coil (25). Unscrew the locknuts (22) and pull off the brake coil (25) from brake adjusters (19). Reassemble the new brake coil on the brake adjusters (19) and reconnect the electrical connectors. Pay attention to place the electrical connectors in the right position so that to allow their insertion. Before reassemble the end cover (26) and the nuts verify that the connections and relative cables are properly tightened. Proceed with the air gap adjustment as stated in the respective paragraph. Verify that the brake coil functions correctly; when the brake is energized, the brake coil (25) should attract the brake moving element (24) with a quick stroke, and hold it without any vibration or noise. In case of any vibration, check that terminal connectors are coupled correctly and tightly.

Air Gap Adjustment.

The air gap *(60) i.e. the distance between the two magnetic cores of the brake coil (25) and the brake moving element (24), must be as shown on Table 5-1b. It's strongly unadvisable to exceed these values in order to avoid vibrations of the brake moving element, prominent noise, the burning of the brake coil or the brake assembly damaging. It's advisable to check periodically the air gap, because the wear of the brake disc linings, it tends to increase. Please note that the brake linings wear is greater during the run-in (few thousand stops). In order to set the air gap back to the required value, operate on the nuts (21-22) to obtain the brake coil forward displacement towards the brake moving element (24). It's strongly recommended to avoid to tighten the locknut (22) located on one brake adjuster (19, 42 for BAPV-BAF series motors) before having completed the positioning of the brake coil (25) on all the brake adjusters. Therefore don't regulate the position of the brake coil adjusting the nut (21) on one brake adjuster, if previously you didn't loose the locknuts (22) on all the brake adjusters (19, 42 for BAPV-BAF series motors). This wrong operation could stress the air gap adjusters. Please verify that the air gap is uniform. The air gap must be uniform to guarantee the right working and avoid mechanical stresses due to a wrong alignment. When the air gap adjustment has been settled, the locknuts (22) should be tightened. For brake assembly with 6 brake adjusters (19, 42 for BAPV-BAF series motors), as first step regulate the brake coil position only on three brake adjusters at 120 by the nuts 21-22. After having adjusted the position on these 3 brake adjusters, to complete the operation go on with the other 3 brake adjusters and first bring the air gap adjusting nuts (21) close to the brake coil and then tighten the locknuts (22). When the operations has been settled, verify that the air gap is uniform and the nuts (21-22) are tightened.

*Note: On MGM Motor Brake spring height is set first then air gap.

5-11. INSPECTION OF HOIST TRAVERSE DRIVE

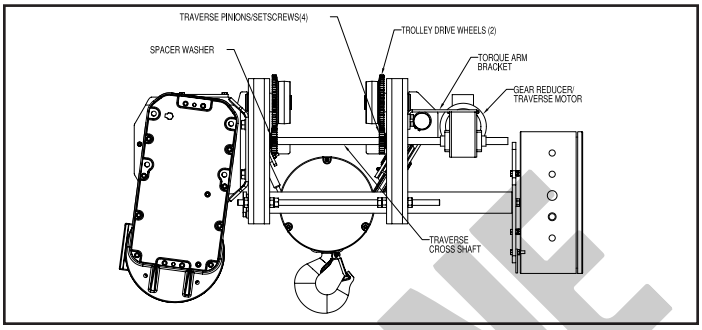

Figure 5-9. Traverse Drive Arrangement ("B" & "C" Frame Shown)

a) Ensure that the hoist is properly fitted to the beam. The hoist must be centered on the beam with clearance between the sides of the bottom of the beam flange and the inside faces of the wheel flanges. Proper clearance must exist along the entire length of beam that the hoist can traverse. An amount of 3/32 to 1/8 inch clearance per side is recommended for a total of 3/16 to 1/4 inch wider than the beam flange. If too little or too much clearance is determined, adjust trolley per Section II, Paragraph 2-2.

b) Inspect wheel treads, flanges, and gear teeth for wear. Check for adequate lubrication (WG, Section IV, Paragraph 4-7) on the wheel gear and pinion mesh. Check wheel bearings for any signs of wear, including rough rotation and signs of lubricant leakage. Replace all damaged or missing items. Wheels must always be changed in opposing pairs and drive wheels should be changed when the drive pinions are replaced.

⚠ CAUTION

Ensure that the cross shaft is properly positioned and locked into place by means of the setscrews. Failure to do so may allow the drive shaft to contact the hoist gearcase.

c) Examine the drive pinions, cross shaft, and cross shaft bearings. Check pinions for gear tooth wear and proper alignment with wheel gear. A spacer washer between the cross shaft bearings and the pinion aligns the gear mesh. Setscrews hold the pinions and spacer washers tight against the bearings. Verify that the setscrews are tight on the cross shaft. If it is necessary to adjust or reset the pinions, verify that the cross shaft surface is free of mechanical damage and oil before tightening the setscrews. If adjustment is necessary, remove setscrews, remove leftover locking patch, and reassemble using a thread locking compound such as Loctite 242. Drive pinions must be replaced as sets and should be replaced along with the drive wheels. The cross shaft bearings are sealed for life and should be replaced at any sign of mechanical wear or lubricant leakage.

When hoists are adjusted or repaired in the field, all set screws must return to the original settings from the manufacturer. This is done by following the below instructions:

1) Apply Loctite 242 to the threads and install the setscrews back into the proper location

2) Tighten setscrews for the traverse pinion gear down onto the key and shaft to 70 in-lbs before beginning the use of the hoist.

HOIST LINE SERVICE COMPANY

d) Inspect the traverse gearbox and motor. Look for signs of rough operation, mechanical damage or lubricant leaks. Inspect the hollow bore and keyed cross shaft for wear. Verify that all bolts that hold the gearbox to the trolley frame (and torque arm) and the four bolts that hold traverse motor to the gearbox are all present and tight. Replace and tighten as necessary. The factory recommends complete replacement of the traverse gearbox. However, gearbox service may be available from your local authorized SHAWBOX repair center.

For the trolley gear reducer, the key must be captured in the keyway between the 2 setscrews. The setscrews are located on each side of the trolley gear reducer. The key will float in the keyway between the setscrews. Do not tighten the setscrew down to the keyway. Screw the setscrew down until the setscrew is flush with the outside of the collar.

5-12. TESTING BLOCK OPERATED LIMIT SWITCH

a) General. The optional block operated limit switch is a secondary upper limit switch actuated when the lower block contacts the actuator rod. The rotary-geared limit switch (screw type limit switch) is the primary upper limit switch and must be temporarily bypassed to allow the block operated limit switch to be tested.

b) Procedure. Remove load from the hook. To disconnect the geared limit switch, refer to Figure 7-2. Remove the limit switch cover then loosen the two (2) screws holding the locking plate in place. Allow the locking plate to slide down and disengage from the adjustment discs. Do not rotate the adjustment discs.

⚠ CAUTION

Damage to the hoist may occur if the block operated limit switch fails during testing.

Damage can be avoided by immediately releasing the pushbutton once the lower block has traveled through the limit switch weight.

The block operated limit switch may now be tested by slowly and carefully raising the hook until the limit switch rod contacts the lower block. If the hook does not stop when the limit switch rod is lifted, immediately release the pushbutton before damage to your hoist occurs. If theblock operated switch functions properly, proceed by testing in the same manner with rated load on the hook. Once it has been determined that the block operated limit switch is functioning properly, the geared limit switch must be reconnected and tested.

Position the lower block three inches (3") below the point where the block operated limit switch is activated. The geared limit switch shall be reconnected by sliding the locking plate back into position ensuring slots on adjustment discs are fully engaged and tightening locking plate screws to 4 in-lbs. (See Figure 7-2). The geared limit switch must then be tested.

Test the geared limit switch by raising the lower block until it stops. Ensure that the geared limit switch stopped the hoist before the block operated limit switch was activated. If this is not the case, see Section VII, Paragraph 7-3 for adjusting the geared limit switch. Replace geared limit switch cover when testing and adjusting is complete.

⚠ WARNING

Check limit switch operation carefully, without load, before placing hoist in service. If misadjusted, SEVERE DAMAGE AND/OR A DROPPED LOAD COULD RESULT. Allow 3" for hook drift in both directions. Never allow less than two (2) complete wraps of rope on drum with hook in lowest position.

5-13. TESTING OVER-CAPACITY LIMIT SWITCH

The over-capacity limit switch is provided as standard equipment on SHAWBOX World Series hoists. This switch is integral to the wire rope dead end assembly and is factory preset to prevent over-capacity lifts. This device is preset at the time of hoist inspection to prevent the lifting of loads weighing 125-150% of rated capacity.

To test the function of the over-capacity limit switch, apply 125% of the rated capacity to load hook. If hoist is capable of lifting the load, then actual switch setting may be higher than necessary and needs to be adjusted. If hoist cannot lift load, then the switch setting is correct. Refer to SECTION VII, Paragraph 7-4 for information regarding the adjustment of the limit switch setting.

5-14. TESTING HOIST

a) General. Testing shall be performed in accordance with FEM Section IX, Series Lifting Equipment, namely Section 9.811 "Specification for rope and chain hoists", and this manual. Before placing hoist in service, hoist should be tested to insure safe operation, when hoist has been disassembled and reassembled. To test, suspend hoist from an overhead supporting member of sufficient strength to support the weight of the hoist and the rated load. Connect hoist to power supply as shown on hoist nameplate and perform the checks listed in b) and c) below.

b) Check hoist as outlined in PRE-OPERATION CHECKS, SECTION II, Paragraph 2-4.

c) Check hoist with rated load.

(1) Attach rated load to lower hook.

(2) Depress "UP" push button and raise load. When push button is released, hoist should stop immediately and hold load at that level.

(3) Depress "DN" push button, lower load a short distance and release button. Hoist should stop immediately and hold load at that level.

NOTE:

If load drifts downward slowly in step 2 or 3 above, motor brake requires adjustment - see Motor Brake Adjustment - SECTION VII, Paragraph 7-1.

SECTION VI - TROUBLESHOOTING

6-1.GENERAL.

This section contains possible causes and solutions to common hoist problems. Please attempt to remedy your hoist problems by following these steps, before contacting the factory.

Whenever servicing electrical components, be sure to shut off and lock out power following proper lockout/tagout procedures.

⚠ WARNING

Working in or near exposed energized electrical equipment presents the danger of electric shock.

TO AVOID INJURY:

DISCONNECT POWER AND IMPLEMENT LOCKOUT/ TAGOUT PROCEDURE BEFORE REMOVING COVER OR SERVICING THIS EQUIPMENT.

HOSEFLAME SERVICE COMPANY

SECTION VI - TROUBLESHOOTING

TROUBLE	PROBABLE CASE	REMEDY
6-1. Hoist Will Not Operate	a. No power to hoist	a. Check switches, circuit breakers or fuses and connections in power supply lines. Check power collectors.
	b. Wrong voltage	b. Check voltage required on motor data plate against power supply.
	c. Loose or broken wire connections in hoist electrical system	c. Shut off and lock out power supply; remove electrical cover on hoist and check wiring connections. Also check connections in push button station and limit switches.
	d. Contactor assembly not functioning	d. See that necessary jumper wires are properly installed. Verify that the contactor armatures are free to move. If binding occurs, replace contactor. Check for burned out contactor coils.
	e. No control voltage	e. Check transformer fuse. If blown, check for grounding and/or shorts in the push button station. Check the transformer coil for signs of overheating. Replace transformer if burned out. Verify the transformer secondary is the same voltage as the coils to which it is connected.
	f. Motor burned out	f. Replace motor. Check input power supply. Check hoist motor connections.
	g. Reverse phasing on three-phase hoists	g. Check phase protection device (PPD), if amber LED is steady; interchange any two power supply line leads per Section II, Paragraph 2-4.b.
6-2. Hook Moves in Wrong Direction	a. Reverse phasing on three-phase hoists	a. Check PPD, if green LED is steady; interchange any two sets (each winding) of motor power leads.
	b. Hoist wired incorrectly	b. Check wiring connections with appropriate wiring diagram.
6-3. Hook Will Raise But Not Lower	a. Lower electrical circuit open	a. Check for loose connections. See that necessary jumper wires are properly installed on contactor.
	b. Contactor assembly not functioning	b. See that necessary jumper wires are properly installed. Verify that the contactor armatures are free to move. If binding occurs, replace contactor. Check for burned out contactor coils.
	c. Down, push button inoperative	c. Check push button contacts and wires.
6-4. Hook Will Lower But Not Raise	a. Excessive load	a. Reduce loading to rated load of hoist, as shown on nameplate.
	b. Hoist electrical circuit open	b. Check for loose connections. See that necessary jumper wires are properly installed on contactor.
	c. Contactor assembly not functioning	c. See that necessary jumper wires are properly installed. Verify that the contactor armatures are free to move. If binding occurs, replace contactor. Check for burned out contactor coils.
	d. Up, down button inoperative	d. Check push button contacts and wires.
6-5. Hoist Will Not Lift Rated Load	a. Low voltage	a. See that power supply current is the same voltage listed on motor data plate. Check hoist motor connections. Check size of power supply lines.

HOOSIER CRANE SERVICE COMPANY

SECTION VI - TROUBLESHOOTING

TROUBLE	PROBABLE CASE	REMEDY
6-6. Hoist Motor Overheats	a. Excessive load	a. Reduce loading to rated load as shown on nameplate.
	b. Excessive duty-cycle	b. Reduce frequency of lifts or amount of jogging.
	c. Wrong voltage or frequency	c. Check current rating on motor data plate against power supply. Check hoist and inspect for defective, worn or damaged parts.
	d. Defective motor or worn bearings in hoist frame	d. Disassemble hoist and inspect for defective, worn or damaged parts.
	e. Brake not adjusted properly	e. Adjust brake per Section VII, Paragraph 7-1.
6-7. Load Drifts Excessively When Hoist Is Stopped	a. Excessive load	a. Reduce loading to rated load, as shown on nameplate.
	b. Motor brake not holding	b. With No Load, check hoist for drift. If drifting is excessive, inspect motor brake (Section V, paragraph 5-10) and adjust as outlined in Section VII, paragraph 7-1.
6-8. Hoist Operates Intermittently	a. Collectors make poor contact	a. Check collectors for free movement of spring arm, weak spring or electrical connections.
	b. Loose connections	b. Check all wiring for loose connections.

SECTION VII - ADJUSTMENTS

7-1. MOTOR BRAKE ADJUSTMENT.

These brakes are designed so that adjustment is seldom required. If, after a period of service, the load hook "drifts" downward more than usual for your hoist before coming to a stop, the motor brake may require adjustment to compensate for brake disc wear. Refer to Figure 5-8 and proceed as outlined in Section V, Paragraph 5-10.

⚠ WARNING

Check to be certain main power switch is locked in open position (OFF) before removing brake cover.

7-2. BLOCK OPERATED LIMIT SWITCH ADJUSTMENT.

The block operated limit stop is minimally adjustable and designed to stop the lower block at the safest high point of travel to eliminate any possibility of double-blocking. When the safest high point is reached, the limit switch automatically stops hook travel. If the block switch is not tripping after contact with the lower block body, loosen the limit switch hub retaining screw and rotate the hub and rod downward to ensure earlier contact. Retighten and test, repeat as needed until switch functions properly.

7-3. GEARED ROTARY LIMIT SWITCH ADJUSTMENT.

The geared rotary type limit switch is standard equipment and is located on the drum end opposite the gearcase end.

This limit switch has a rotary screw driven by a gear reduction that is coupled to the end of the drum shaft. Adjustment discs operate the contacts of separate switches, one for the hoisting circuit and one for the lowering circuit. The switch assembly must be wired in accordance with the appropriate wiring diagram, which is shipped with the hoist. Instructions for adjusting limit switch are inside cover and are repeated below (see Figure 7-2).

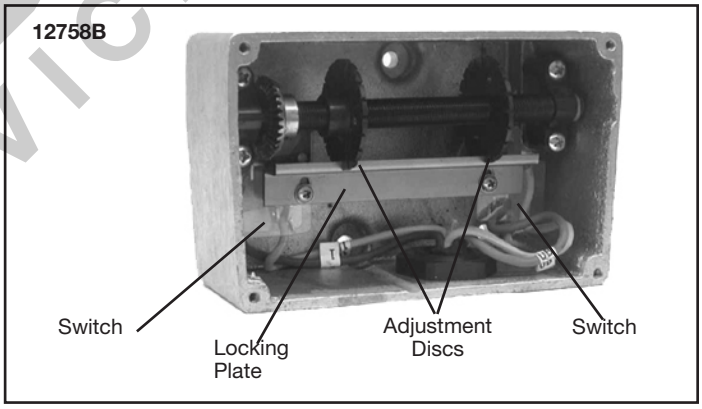

Figure 7-2. Screw-Type Limit Switch Adjustment (Wires Not Shown for Clarity.)

a) Remove four screws and lift off switch cover.

⚠ WARNING

Be certain that electrical power supply is OFF and locked in the open position before removing limit switch cover.

HOOSIER CRANE SERVICE COMPANY

b) Loosen locking plate screws. Slide locking plate away from adjustment disc.

c) Turn proper adjustment disc (right for up, left for down toward switch to reduce hook travel or away from switch to increase hook travel.

d) Slide locking plate back into position ensuring slots on adjustment discs are fully engaged, tighten locking plate screws to 4 in-lbs.

e) Replace cover.

f) Carefully check limit switch operation without load before placing hoist in service. If misadjusted, repeat steps above. Allow 3" for hook drift in both directions. Never allow less than two (2) complete wraps of rope on drum with hook in lowest position

⚠ WARNING

Check limit switch operation carefully, without load, before placing hoist in service. If misadjusted, SEVERE DAMAGE AND/OR A DROPPED LOAD COULD RESULT. Allow 3" for hook drift in both directions. Never allow less than two (2) complete wraps of rope on drum with hook in lowest position.

Provide a light film of **MPG** grease (Paragraph 4-7) on gear of both limit switches.

7-4. OVER-CAPACITY LIMIT SWITCH ADJUSTMENT.

The over-capacity limit switch is standard equipment and is integrated into the wire rope dead end assembly (see Figures 7-3a. & 7-3b.). The device is designed to prevent over-loading of the equipment, but is not intended to be used as a load-measuring device.

The limit switch is factory preset to prevent the lifting of loads weighing 125-150% of rated capacity. At times, it may be necessary to adjust the limit switch setting.

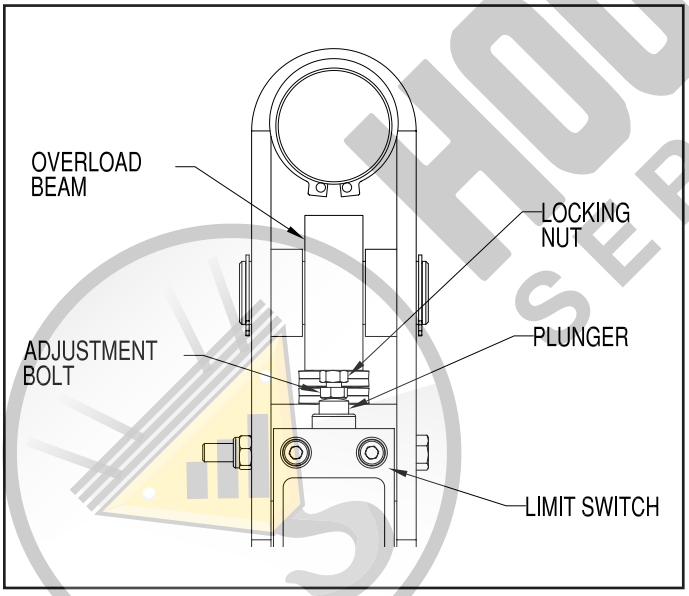

Figure 7-3a. Over-Capacity Limit Switch ("B" & "C" Frame)

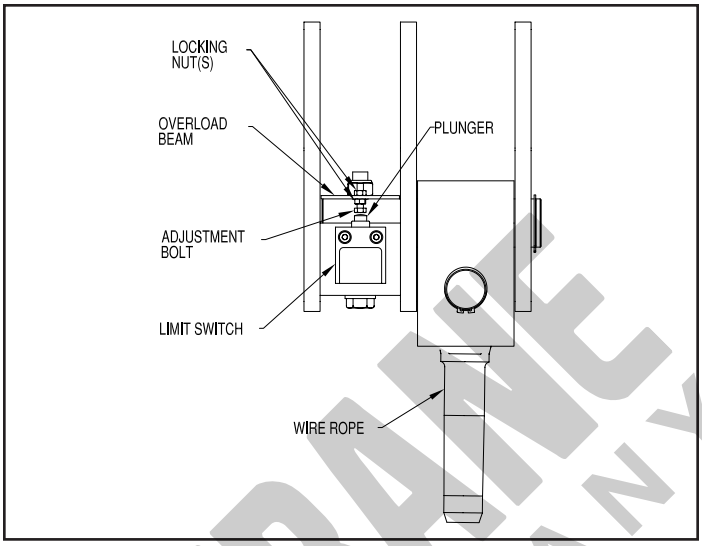

Figure 7-3b. Over-Capacity Limit Switch ("D" Frame)

To adjust the limit switch setting, simply loosen the locking nut(s) (see Figures 7-3a & 7-3b) and then either loosen or tighten the adjustment bolt into the overload beam to achieve the desired setting. Loosening the adjustment bolt will reduce the load required to trip the limit switch plunger while tightening will increase this setting. Only very small adjustment is required. Adjusting the limit switch setting to increase the capacity limit beyond 125% is not permitted.

7-5.SHORTENING OF PUSHBUTTON CABLE

⚠ WARNING

Be certain that electrical power supply is OFF and locked in the open position before attempting shortening of push button cable.

a) Loosen screws at cable connectors and clamps at top of cable.

b) Adjust steel support cable to proper length and tighten screws.

c) Loosen upper cable grip and pull excess cable into connection box at hoist.

d) Tighten cable grip and cut off excess cable.

e) Strip cable sheath and connect wires with the same type of terminals previously furnished (care must be taken to match previous wire color coding with wire markers in accordance with the wiring diagram furnished with the hoist).

SECTION VIII - WIRING DIAGRAMS

8-1. GENERAL.

Comprehensive wiring diagrams for SHAWBOX electric hoists have been omitted from this book because of the many possible variations. This is due to different currents and types of electrical components used in their construction. Figures 8-1 and 8-2 are examples of typical two-speed hoist and trolley wiring diagrams respectively. However, please consult the exact wiring diagrams for your hoist. A print of the correct wiring diagram for each hoist is furnished as a separate insert and shipped with the hoist. We suggest you carefully file the wiring diagram with this book for future reference.

HOOSIER CRANE SERVICE COMPANY

Figure 8-1. Elementary Wiring Diagram for a Two-Speed Hoist and Trolley with Standard Features

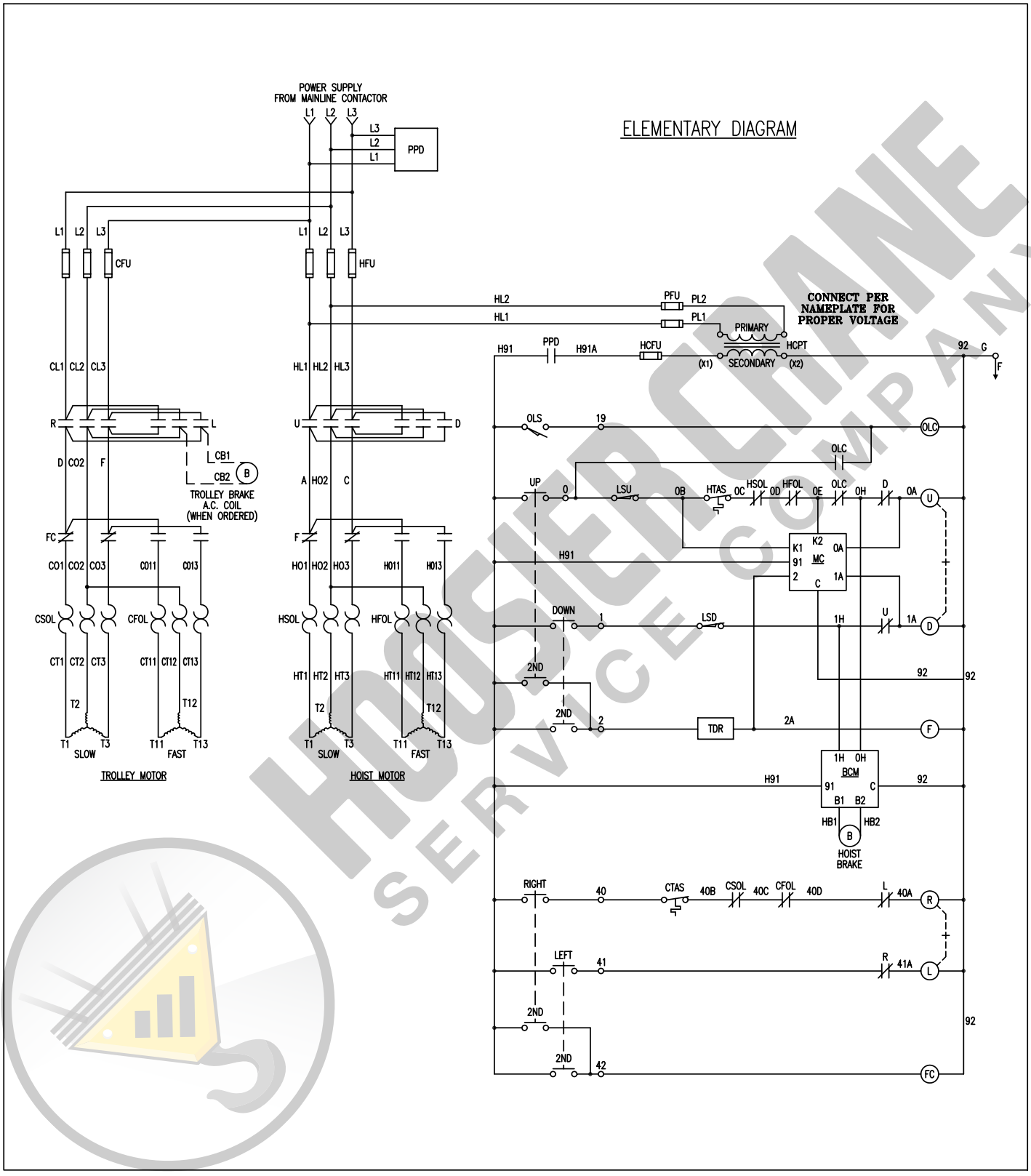

HOOSIER CRANE SERVICE COMPANY

Figure 8-2. Component Diagram for a Two-Speed Hoist and Trolley with Standard Features

WIRE #		DEVICE CONNECTED
L1		HFU, CFU, PPD
L2		HFU, CFU, PPD
L3		HFU, CFU, PPD
HL1		HFU, U–D, PFU
HL2		HFU, U–D, PFU
HL3		HFU, U–D
CL1		CFU, R–L
CL2		CFU, R–L
CL3		CFU, R–L
PL1		PFU, HCPT
PL2		PFU, HCPT
A		U–D, F
C		U–D, F
D		R–L, FC
F		R–L, FC
HO1		F, HSOL
HO2		U–D, HSOL, HFOL
HO3		F, HSOL
HO11		F, HFOL
HO13		F, HFOL
CO1		FC, CSOL
CO2		R–L, CSOL, CFOL
CO3		FC, CSOL
CO11		FC, CFOL
CO13		FC, CFOL
HT1		HSOL
HT2		HSOL
HT3		HSOL
HT11		HFOL
HT12		HFOL
HT13		HFOL
CT1		CSOL
CT2		CSOL
CT3		CSOL
CT11		CFOL
CT12		CFOL
CT13		CFOL
0	TB	OLC
0A		D, U, MC
0B	TB	MC
0C	TB	HSOL
0D		HSOL, HFOL
0E		HFOL, OLC, MC
0H		OLC, D, BCM
1	TB	
1A		U, D, MC
1H	TB	U, BCM
2	TB	TDR
2A		TDR, F, MC
19	TB	OLC
40	TB	
40A		L, R
40B	TB	CSOL
40C		CSOL, CFOL
40D		CFOL, L
41	TB	
41A		R, L
42	TB	FC
H91	TB	PPD, BCM, MC
H91A		HCFU, PPD
92	TB	HCPT, OLC, U, D, F, BCM, MC, R, L, FC
CB1	TB	R–L
CB2	TB	R–L
HB1		BCM
HB2		BCM

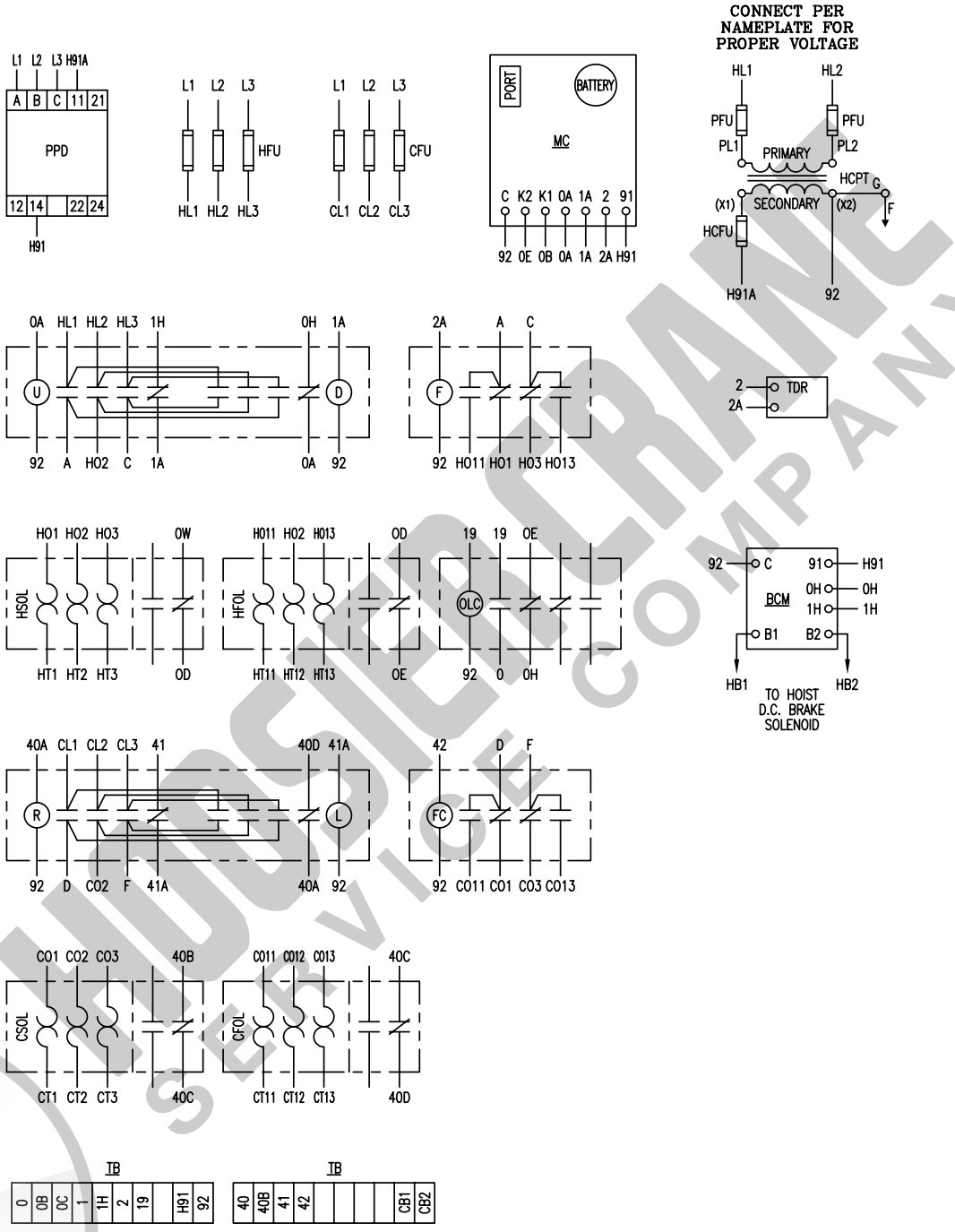

DANGER:

(PPD) – PHASE REVERSAL/LOSS PROTECTION DEVICE SHOWS A STEADY AMBER LED WHEN IN PHASE REVERSAL CONDITION.

CORRECT IMPROPER PHASING BY INTER-CHANGING INPUT POWER LEADS L1 AND L2. DO NOT CHANGE PUSHBUTTON OR MOTOR CIRCUIT WIRING.

WARNING:

THIS EQUIPMENT MUST BE EFFECTIVELY GROUNDED ACCORDING TO APPLICABLE CODES.

AVERTISSEMENT:

CET EQUIPMENT DOIT ETRE MIS A'LA TERRE EN ACCORDANCE AVEC LES NORMES EN VIGUEUR.

SYMBOL DESIGNATIONS

PPD – PHASE REV./LOSS PROTECTION DEVICE
HFU – HOIST MOTOR CIRCUIT FUSING
PFU – TRANSFORMER PRIMARY FUSING
HCPT – CONTROL CIRCUIT TRANSFORMER
HCFU – CONTROL CIRCUIT FUSING
U – HOIST UP CONTACTOR
D – HOIST DOWN CONTACTOR
F – HOIST FAST SPEED CONTACTOR
HSOL – HOIST SLOW SPEED THERMAL OVERLOAD RELAY
HFOL – HOIST FAST SPEED THERMAL OVERLOAD RELAY
LSU – HOIST UPPER GEAR TYPE LIMIT SWITCH
LSD – HOIST LOWER GEAR TYPE LIMIT SWITCH
BCM – D.C. BRAKE CONTROL MODULE
TDR – TIMER DELAY MODULE
HTAS – HOIST MOTOR TEMPERATURE ACTUATED SWITCH
OLS – OVERLOAD LIMIT SWITCH
OLC – OVERLOAD LIMIT SWITCH CONTACTOR
CFU – TROLLEY MOTOR CIRCUIT FUSING
R – TROLLEY RIGHT CONTACTOR
L – TROLLEY LEFT CONTACTOR
FC – TROLLEY FAST CONTACTOR
CSOL – TROLLEY SLOW SPEED THERMAL OVERLOAD RELAY
CFOL – TROLLEY FAST SPEED THERMAL OVERLOAD RELAY
CTAS – TROLLEY MOTOR TEMPERATURE ACTIVATED SWITCH
MC – MONITOR CARD
TB – TERMINAL BOARD
G – FRAME GROUND
F

HOISTCRANE SERVICE COMPANY

SECTION IX - PARTS LIST

9-1. GENERAL.

The parts lists and illustrations in this section of the manual cover parts for models of SHAWBOX World Series Electric hoists. A typical hoist is shown as the basis for the exploded parts illustrations; therefore, certain variations may occur from the information given. For this reason, always give the Hoist Serial Number, Catalog Number, Motor Horsepower, Voltage, Phase, Frequency and Capacity of Hoist when ordering parts.

Throughout this manual, you will see references to the “S2" and “S4" frame size hoists. If you are unsure about which frame type you have, count the number of rope falls that are supporting the lower block or see section 5-7 rope reeving.

SHAWBOX World Series hoists are built in three basic frame sizes, "B", "C" and "D" Frame. To determine the size of your hoist, measure the width of hoist gearcase (see Figure 4-2). The "B" Frame measures 9-3/4" wide and requires approximately 5 quarts of oil. The "C" Frame measures 12-1/2" and requires approximately 11 quarts of oil. The "D" Frame measures 17" and requires approximately 12 quarts of oil.

Certain parts of your hoist will, in time, require replacement under normal wear conditions. It is suggested that these parts be purchased for your hoist as spares for future use. These parts are listed at the end of this manual.

The numbers assigned to parts of our various assemblies in our Parts List are the part numbers used in manufacturing. Some of these itemized parts are not for individual sale, but must be grouped with other related replacement items.

WHEN ORDERING PARTS OR INFORMATION ON THIS EQUIPMENT, ALWAYS INCLUDE MODEL AND SERIAL NUMBER ON ORDER.

⚠ WARNING

Using "Commercial" or other manufacturer's parts to repair World Series Hoists may cause load loss.

TO AVOID INJURY:

Use only SHAWBOX Hoist supplied parts. Parts may look alike but SHAWBOX Hoist parts are made of specific materials or processed to achieve specific properties.

PARTS STAR™ BY COLUMBUS McKINNON

LIST OF PART ILLUSTRATIONS

TITLE	FIGURE No.	PAGE No.
Hoist Drum, Drum Frame, Gearcase, Motor, Rope Guide, and Limit Switch	9-1a, 9-1b	29, 32
Hoist Gearing	9-2	36
Motor Driven Trolley Frame and Drive	9-3	39
Lower Block Assembly	9-4a, 9-4b	44, 46
Upper Block Assembly	9-5	47
Wire Rope Dead End Assembly with Limit Switch	9-6a, 9-6b, 9-6c, 9-6d	49, 51, 52, 54
Rope Guide Assembly	9-7a, 9-7b	55, 56
Hoist Motor Brake – Standard Service (ABM Motor)	9-8a, 9-8b	57, 58
Hoist Motor Brake – Outdoor Service (ABM Motor)	9-9a, 9-9b	59, 60
Hoist Motor Brake - Standard Service (MGM Motor)	9-10a, 9-10b	61
Hoist Motor Brake - Outdoor Service (MGM Motor)	9-11a, 9-11b	62

NOTES

HOOSIER CRANE SERVICE COMPANY

S4 & S2 REEVED

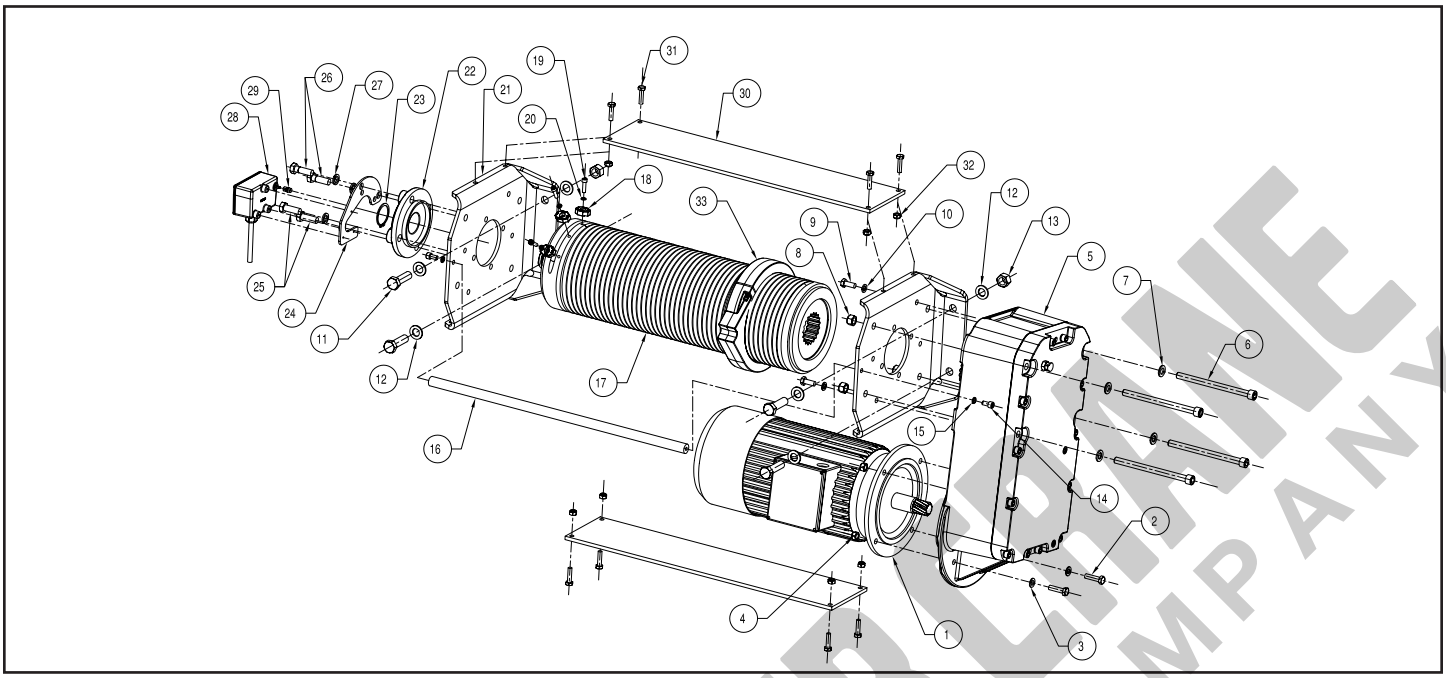

Figure 9-1a. Hoist Drum, Drum Frame, Gearcase, Motor, Rope Guide and Screw Type Limit Switch

"B" Frame: Hoist Components for Figure 9-1a. S4 & S2 Reeved			
REF. No.	**Part Number**	**Description**	**Qty. Req'd**
1	See Chart	7.5 HP Hoist Motor, 2-Speed with Brake and Fan	1
2	N/A	Hex Head Bolt, M12	2
3	N/A	Flat Washer, M12	2
4	N/A	Locknut, M12	4
5	44933001	Hoist Gearcase (See Figure 9-2 for Parts)	1
6	N/A	Socket Head Cap Screw, M12	4
7	N/A	Flat Washer, M12	4
8	N/A	Locknut, M12	4
9	N/A	Hex Head Bolt, M12	2
10	N/A	Lockwasher, M12	2
11	N/A	Hex Head Bolt, M16	4
12	N/A	High Strength Flat Washer, M16	8
13	N/A	Locknut, M16	4
14	N/A	Socket Head Cap Screw, M10	2
15	N/A	Hi-Collar Lockwasher, M10	2
16	-	Drum Frame Rod	1
	23385901	Frame Rod, 25' Lift Model	
	23385902	Frame Rod, 40' Lift Model, 2 Part Reeved 80' Lift Model	
	23385906	Frame Rod, 60' Lift Model	
17	-	Rope Drum	1
	44931501	Rope Drum, 25' Lift Model	
	44931502	Rope Drum, 40' Lift Model, 2 Part Reeved 80' Lift Model	
	44931503	Rope Drum, 60' Lift Model	
18	23380301	Rope Clamp	3

(continued on next page)

"B" Frame: Hoist Components for Figure 9-1a. S4 & S2 Reeved			
REF. No.	**Part Number**	**Description**	**Qty. Req'd**
19	N/A	Socket Head Cap Screw, M8	3
20	N/A	Hi-Collar Lockwasher, M8	3
21	33291102	Drum Frame Bracket	2
22	11801803	Flanged Cartridge Ball Bearing	1
23	11802401	Heavy Duty External Retaining Ring	1
24	23383801	Limit Switch Bracket	1
25	N/A	Hex Head Bolt (Short), M12	2
26	N/A	Hex Head Bolt (Long), M12	2
27	N/A	Lockwasher, M12	4
28	43981305	Geared Limit Switch	1
29	11593901	Drum Shaft Insert for Geared Limit Switch	1
30	-	Stiffener Plate	2
	N/A	Stiffener Plate, 25' Lift Model	
	N/A	Stiffener Plate, 40' Lift Model, 2 Part Reeved 80' Lift Model	
	N/A	Stiffener Plate, 60' Lift Model	
31	N/A	Socket Head Cap Screw, M10	8
32	N/A	Locknut, M10	8
33	44931801C	Rope Guide (See Figure 9-7a for Parts)	1
34	NO12283	Hydraulic Fitting for Flanged Cartridge Ball Bearing (Not Shown)	1
35a	44930801	SHAW-BOX Brand Label for Gearcase (Not Shown)	1
35b	44930802	YALE Brand Label for Gearcase (Not Shown)	1

"C" Frame: Hoist Components for Figure 9-1a. S4 & S2 Reeved			
REF. No.	**Part Number**	**Description**	**Qty. Req'd**
1	See Chart	15 HP Hoist Motor, 2-Speed with Brake and Fan	1
2	N/A	Hex Head Bolt, M12	2
3	N/A	Flat Washer, M12	2
4	N/A	Locknut, M12	4
5	44935501	Hoist Gearcase (See Figure 9-2 for Parts)	1
6	N/A	Socket Head Cap Screw, M16	4
7	N/A	Flat Washer, M16	4
8	N/A	Locknut, M16	4
9	N/A	Hex Head Bolt, M12	2
10	N/A	Lockwasher, M12	2
11	N/A	Hex Head Bolt, M20	4
12	N/A	High Strength Flat Washer, M20	8
13	N/A	Locknut, M20	4
14	N/A	Socket Head Cap Screw, M10	2
15	N/A	Hi-Collar Lockwasher, M10	2
16	-	Drum Frame Rod	1
	23387601	Frame Rod, 25' Lift Model	
	23387602	Frame Rod, 40' Lift Model, 2 Part Reeved 80' Lift Model	
	23387605	Frame Rod, 60' Lift Model	

(continued on next page)

HOOVER CRANE SERVICE COMPANY

"C" Frame: Hoist Components for Figure 9-1a. S4 & S2 Reeved			
REF. No.	Part Number	Description	Qty. Req'd
17	-	Rope Drum	1
	44933501	Rope Drum, 25' Lift Model	
	44933502	Rope Drum, 40' Lift Model, 2 Part Reeved 80' Lift Model	
	44933503	Rope Drum, 60' Lift Model	
18	23380301	Rope Clamp	3
19	N/A	Socket Head Cap Screw, M8	3
20	N/A	Hi-Collar Lockwasher, M8	3
21	33291702	Drum Frame Bracket	2
22	11801802	Flanged Cartridge Ball Bearing	1
23	10119421	External Retaining Ring	1
24	23383801	Limit Switch Bracket	1
25	N/A	Hex Head Bolt (Short), M16	2
26	N/A	Hex Head Bolt (Long), M16	2
27	N/A	Lockwasher, M16	4
28	43981305	Geared Limit Switch	1
29	11593901	Drum Shaft Insert for Geared Limit Switch	1
30	-	Stiffener Plate	2
	N/A	Stiffener Plate, 25' Lift Model	
	N/A	Stiffener Plate, 40' Lift Model, 2 Part Reeved 80' Lift Model	
	N/A	Stiffener Plate, 60' Lift Model	
31	N/A	Socket Head Cap Screw, M10	8
32	N/A	Locknut, M10	8
33	44933801C	Rope Guide (See Figure 9-7a for Parts)	1
34	NO410	Hydraulic Fitting for Flanged Cartridge Ball Bearing (Not Shown)	1
35a	44934201	SHAWBOX Brand Label for Gearcase (Not Shown)	1
35b	44934202	YALE Brand Label for Gearcase (Not Shown)	1

NOTES

HOOSIER CRANE SERVICE COMPANY

S4 & S2 REEVED

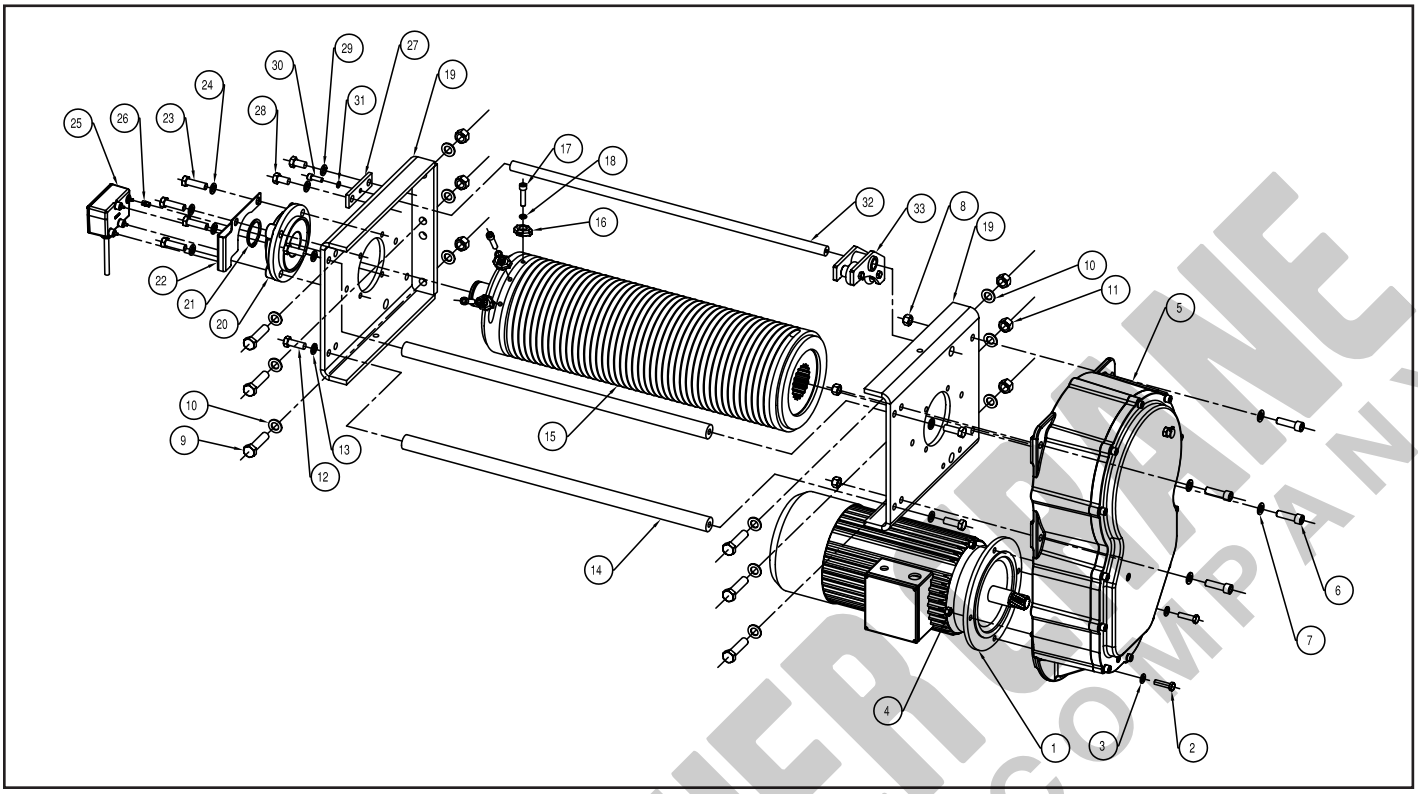

Figure 9-1b. Hoist Drum, Drum Frame, Gearcase, Motor, Rope Guide and Screw Type Limit Switch

"D" Frame: Hoist Components for Figure 9-1b. S4 & S2 Reeved			
REF. No.	**Part Number**	**Description**	**Qty. Req'd**
1	See Chart	20 HP Hoist Motor, 2-Speed with Brake and Fan	1
2	N/A	Hex Head Bolt, M12	2
3	N/A	Flat Washer, M12	2
4	N/A	Locknut, M12	4
5	44936501	Hoist Gearcase (See Figure 9-2 for Parts)	1
6	N/A	Socket Head Cap Screw, M16	4
7	N/A	Flat Washer, M16	4
8	N/A	Locknut, M16	4
9	N/A	Hex Head Bolt, M20	6
10	N/A	High Strength Flat Washer, M20	12
11	N/A	Locknut, M20	6
12	N/A	Hex Head Bolt, M16	4
13	N/A	Lockwasher, M16	4
14	-	Drum Frame Rod	2
	23394601	Frame Rod, 25' Lift Model	
	23394602	Frame Rod, 40' Lift Model, 2 Part Reeved 80' Lift Model	
	23394603	Frame Rod, 60' Lift Model	
15	-	Rope Drum	1
	44936701	Rope Drum, 25' Lift Model	
	44936702	Rope Drum, 40' Lift Model, 2 Part Reeved 80' Lift Model	
	44936703	Rope Drum, 60' Lift Model	
16	23332702	Rope Clamp	3

(continued on next page)

"D" Frame: Hoist Components for Figure 9-1b. S4 & S2 Reeved			
REF. No.	Part Number	Description	Qty. Req'd
17	N/A	Socket Head Cap Screw, M12	3
18	N/A	Hi-Collar Lockwasher, M12	3
19	33293301	Drum Frame Bracket	2
20	11801804	Flanged Cartridge Ball Bearing	1
21	11802402	Heavy Duty External Retaining Ring	1
22	23395201	Limit Switch Bracket	1
23	N/A	Hex Head Bolt, M16	4
24	N/A	Lockwasher, M16	4
25	43981305	Geared Limit Switch	1
26	11593901	Drum Shaft Insert for Geared Limit Switch	1
27	N/A	Rope Guide Keeper Plate	1
28	N/A	Hex Head Bolt, M16	2
29	N/A	Lockwasher, M16	2
30	N/A	Socket Head Cap Screw, M10	1
31	N/A	Hi-Collar Lockwasher, M10	1
32	-	Rope Guide Rod	1
	23387603	Guide Rod, 25' Lift Model	
	23387604	Guide Rod, 40' LIft Model, 2 Part Reeved 80' Lift Model	
	23387606	Guide Rod, 60' Lift Model	
33	33293401C	Rope Guide (See Figure 9-7b for Parts)	1
34a	44937201	SHAW-BOX Brand Label for Gearcase (Not Shown)	1
34b	44937202	YALE Brand Label for Gearcase (Not Shown)	1

2-SPEED ABM HOIST MOTORS					
MOTOR 7.5/1.875 HP 3600/900 RPM	B FRAME 5 TONNE (S4 REEVING) 2-1/2 TONNE (S2 REEVING)	MOTOR 15/3.75 HP 3600/900 RPM	C FRAME 7-1/2 & 10 TONNE (S4 REEVING) 3-3/4 & 5 TONNE (S2 REEVING)	MOTOR 20/5 HP 3600/900 RPM	D FRAME 15 TONNE (S4 REEVING) 7-1/2 TONNE (S2 REEVING)
POWER SUPPLY	PART NUMBER	POWER SUPPLY	PART NUMBER	POWER SUPPLY	PART NUMBER
208V-3PH-60HZ	33313801	208V-3PH-60HZ	33314001	208V-3PH-60HZ	33292901
230V-3PH-60HZ	33313802	230V-3PH-60HZ	33314002	230V-3PH-60HZ	33292902
460V-3PH-60HZ	33313803	460V-3PH-60HZ	33314003	460V-3PH-60HZ	33292903
575V-3PH-60HZ	33313804	575V-3PH-60HZ	33314004	575V-3PH-60HZ	33292904
380V-3PH-50HZ	33313805	380V-3PH-50HZ	33314005	380V-3PH-50HZ	33292905

2-SPEED ABM HOIST MOTORS WITH IP55 MOTOR BRAKE (OUTDOOR SERVICE)					
MOTOR 7.5/1.875 HP 3600/900 RPM	B FRAME 5 TONNE (S4 REEVING) 2-1/2 TONNE (S2 REEVING)	MOTOR 15/3.75 HP 3600/900 RPM	C FRAME 7-1/2 & 10 TONNE (S4 REEVING) 3-3/4 & 5 TONNE (S2 REEVING)	MOTOR 20/5 HP 3600/900 RPM	D FRAME 15 TONNE (S4 REEVING) 7-1/2 TONNE (S2 REEVING)
POWER SUPPLY	PART NUMBER	POWER SUPPLY	PART NUMBER	POWER SUPPLY	PART NUMBER
208V-3PH-60HZ	33294001	208V-3PH-60HZ	33294101	208V-3PH-60HZ	33294201
230V-3PH-60HZ	33294002	230V-3PH-60HZ	33294102	230V-3PH-60HZ	33294202
460V-3PH-60HZ	33294003	460V-3PH-60HZ	33294103	460V-3PH-60HZ	33294203
575V-3PH-60HZ	33294004	575V-3PH-60HZ	33294104	575V-3PH-60HZ	33294204
380V-3PH-50HZ	33294005	380V-3PH-50HZ	33294105	380V-3PH-50HZ	33294205

HOOSIER CRANE SERVICE COMPANY

2-SPEED MGM HOIST MOTORS

MOTOR 7.5/1.875 HP 3600/900 RPM	B FRAME 5 TONNE (S4 REEVING) 2-1/2 TONNE (S2 REEVING)	MOTOR 15/3.75 HP 3600/900 RPM	C FRAME 7-1/2 & 10 TONNE (S4 REEVING) 3-3/4 & 5 TONNE (S2 REEVING)	MOTOR 20/5 HP 3600/900 RPM	D FRAME 15 TONNE (S4 REEVING) 7-1/2 TONNE (S2 REEVING)
POWER SUPPLY	PART NUMBER	POWER SUPPLY	PART NUMBER	POWER SUPPLY	PART NUMBER
208V-3PH-60HZ	33327301	208V-3PH-60HZ	33330701	208V-3PH-60HZ	33330801
230V-3PH-60HZ	33327302	230V-3PH-60HZ	33330702	230V-3PH-60HZ	33330802
460V-3PH-60HZ*	33327303	460V-3PH-60HZ*	33330703	460V-3PH-60HZ*	33330803
575V-3PH-60HZ	33327304	575V-3PH-60HZ	33330704	575V-3PH-60HZ	33330804
380V-3PH-50HZ*	33327303	380V-3PH-50HZ*	33330703	380V-3PH-50HZ*	33330803

2-SPEED MGM HOIST MOTORS WITH IP55 MOTOR BRAKE (OUTDOOR SERVICE)

MOTOR 7.5/1.875 HP 3600/900 RPM	B FRAME 5 TONNE (S4 REEVING) 2-1/2 TONNE (S2 REEVING)	MOTOR 15/3.75 HP 3600/900 RPM	C FRAME 7-1/2 & 10 TONNE (S4 REEVING) 3-3/4 & 5 TONNE (S2 REEVING)	MOTOR 20/5 HP 3600/900 RPM	D FRAME 15 TONNE (S4 REEVING) 7-1/2 TONNE (S2 REEVING)
POWER SUPPLY	PART NUMBER	POWER SUPPLY	PART NUMBER	POWER SUPPLY	PART NUMBER
208V-3PH-60HZ	33327311	208V-3PH-60HZ	33330711	208V-3PH-60HZ	33330811
230V-3PH-60HZ	33327312	230V-3PH-60HZ	33330712	230V-3PH-60HZ	33330812
460V-3PH-60HZ*	33327313	460V-3PH-60HZ*	33330713	460V-3PH-60HZ*	33330813
575V-3PH-60HZ	33327314	575V-3PH-60HZ	33330714	575V-3PH-60HZ	33330814
380V-3PH-50HZ*	33327313	380V-3PH-50HZ*	33330713	380V-3PH-50HZ*	33330813

*Note: Motors are dual rated for 460V-3PH-60HZ and 380V-3PH-50HZ power supply.

INVERTER DUTY MGM HOIST MOTORS

MOTOR 4.8 HP 1800 RPM	B FRAME 5 TONNE (S4 REEVING) 2-1/2 TONNE (S2 REEVING)	MOTOR 8.8 HP 1800 RPM	C FRAME 7-1/2 & 10 TONNE (S4 REEVING) 3-3/4 & 5 TONNE (S2 REEVING)	MOTOR 12 HP 1800 RPM	D FRAME 15 TONNE (S4 REEVING) 7-1/2 TONNE (S2 REEVING)
POWER SUPPLY	PART NUMBER	POWER SUPPLY	PART NUMBER	POWER SUPPLY	PART NUMBER
208V-3PH-60HZ	33336601	208V-3PH-60HZ	33336602	208V-3PH-60HZ	33336603
230V-3PH-60HZ		230V-3PH-60HZ		230V-3PH-60HZ	
460V-3PH-60HZ		460V-3PH-60HZ		460V-3PH-60HZ	
575V-3PH-60HZ	CONTACT FACTORY	575V-3PH-60HZ	CONTACT FACTORY	575V-3PH-60HZ	CONTACT FACTORY

INVERTER DUTY MGM HOIST MOTORS WITH IP55 MOTOR BRAKE (OUTDOOR SERVICE)

MOTOR 4.8 HP 1800 RPM	B FRAME 5 TONNE (S4 REEVING) 2-1/2 TONNE (S2 REEVING)	MOTOR 8.8 HP 1800 RPM	C FRAME 7-1/2 & 10 TONNE (S4 REEVING) 3-3/4 & 5 TONNE (S2 REEVING)	MOTOR 12 HP 1800 RPM	D FRAME 15 TONNE (S4 REEVING) 7-1/2 TONNE (S2 REEVING)
POWER SUPPLY	PART NUMBER	POWER SUPPLY	PART NUMBER	POWER SUPPLY	PART NUMBER
208V-3PH-60HZ	33336611	208V-3PH-60HZ	33336612	208V-3PH-60HZ	33336613
230V-3PH-60HZ		230V-3PH-60HZ		230V-3PH-60HZ	
460V-3PH-60HZ		460V-3PH-60HZ		460V-3PH-60HZ	
575V-3PH-60HZ	CONTACT FACTORY	575V-3PH-60HZ	CONTACT FACTORY	575V-3PH-60HZ	CONTACT FACTORY

HOOSIER CRANE SERVICE COMPANY

HOIST DYNAMIC BRAKING RESISTORS					
MOTOR 4.8 HP 1800 RPM	B FRAME 5 TONNE (S4 REEVING) 2-1/2 TONNE (S2 REEVING)	MOTOR 8.8 HP 1800 RPM	C FRAME 7-1/2 & 10 TONNE (S4 REEVING) 3-3/4 & 5 TONNE (S2 REEVING)	MOTOR 12 HP 1800 RPM	D FRAME 15 TONNE (S4 REEVING) 7-1/2 TONNE (S2 REEVING)
POWER SUPPLY	PART NUMBER	POWER SUPPLY	PART NUMBER	POWER SUPPLY	PART NUMBER
208V-3PH-60HZ	208V-3PH-60HZ	45430471	45430472	208V-3PH-60HZ	45430473
230V-3PH-60HZ	230V-3PH-60HZ			230V-3PH-60HZ	
460V-3PH-60HZ	460V-3PH-60HZ	45430474	45430475	460V-3PH-60HZ	45430476
575V-3PH-60HZ	575V-3PH-60HZ			575V-3PH-60HZ	

NOTES

HOOSIER CRANE SERVICE COMPANY

S4 & S2 REEVED

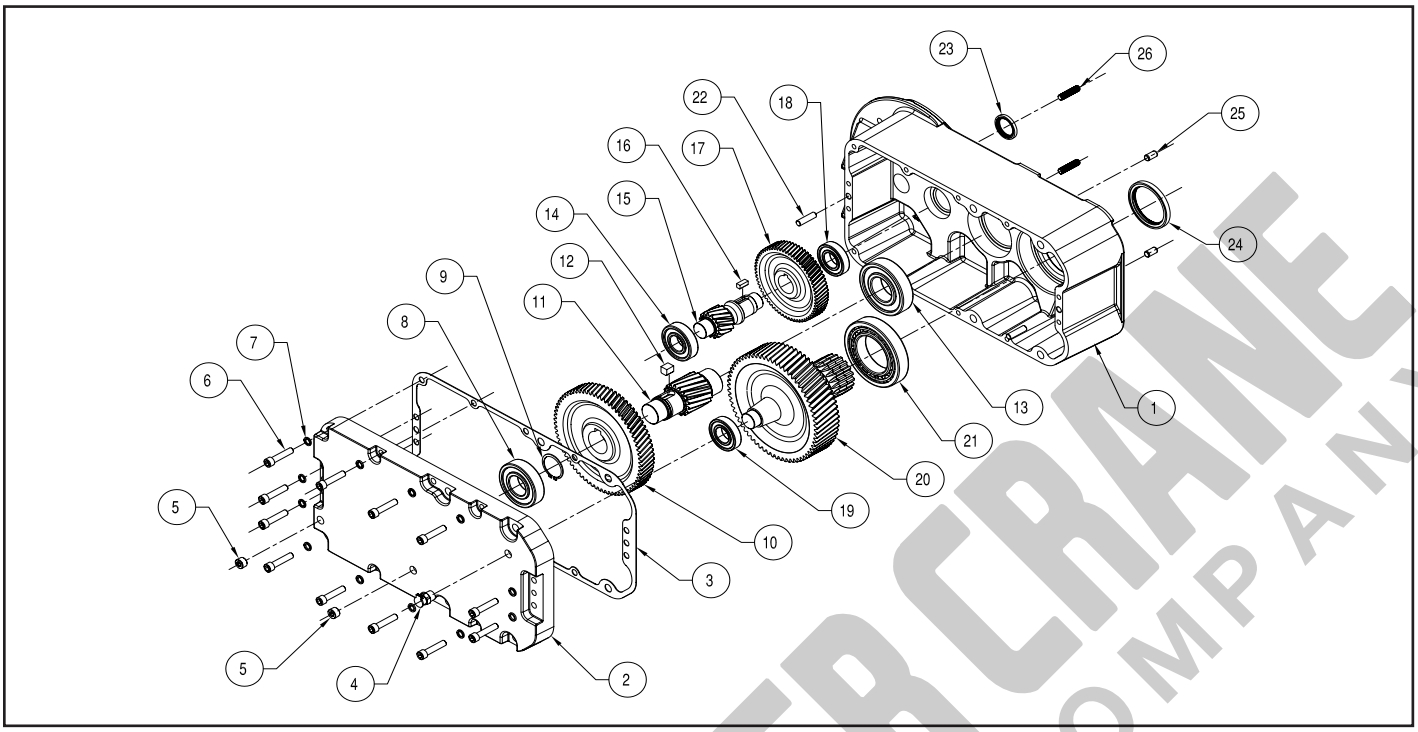

Figure 9-2. Hoist Gearing

"B" Frame: Hoist Gearing for Figure 9-2. S4 & S2 Reeved			
REF. No.	**Part Number**	**Description**	**Qty. Req'd**
	44933001C	**Complete 5t Hoist Gearcase Ass'y. - 80.57:1 Ratio**	**1**
	44933090	**Gearcase Gasket/Seal Kit (Incl. Ref. Nos. 3, 23, 24)**	
	44933091	**Gearcase Gasket/Bearings Kit (Incl. Ref. Nos. 3, 8, 13, 14, 18, 19, 21, 23, 24)**	
1	N/A	Gearcase	1
2	N/A	Cover	1
3	N/A	Gasket	1
4	-	Vent Plug	1
5	-	Drain/Fill Level Plug	2
6	N/A	Socket Head Cap Screw, M8	12
7	N/A	Hi-Collar Lockwasher, M8	12
8	N/A	Ball Bearing	1
9	N/A	External Retaining Ring	1
10	N/A	Intermediate Gear	1
11	N/A	Drum Pinion Shaft	1
12	N/A	Key	1
13	N/A	Ball Bearing	1
14	N/A	Ball Bearing	1
15	N/A	Intermediate Pinion Shaft	1
16	N/A	Key	1
17	N/A	Motor Gear	1
18	N/A	Ball Bearing	1
19	N/A	Ball Bearing	1
20	N/A	Output Shaft	1
21	N/A	Roller Bearing	1
22	N/A	Dowel Pin	2
23	N/A	Motor Shaft Oil Seal	1
24	N/A	Output Shaft Oil Seal	1
25	N/A	Torque Pin	2
26	N/A	Threaded Stud, M12	2

HOOSIER CRANE COMPANY SERVICE

"C" Frame: Hoist Gearing for Figure 9-2. S4 & S2 Reeved			
REF. No.	**Part Number**	**Description**	**Qty. Req'd**
	44935501C	**Complete 10t Hoist Gearcase Ass'y. - 103.8:1 Ratio**	**1**
	44935501C	**Complete 7.5t Hoist Gearcase Ass'y. - 103.8:1 Ratio**	**1**
	44935590	**Gearcase Gasket/Seal Kit (Incl. Ref. Nos. 3, 23, 24)**	
	44935591	**Gearcase Gasket/Bearings Kit (Incl. Ref. Nos. 3, 8, 13, 14, 18, 19, 21, 23, 24)**	**1**
1	N/A	Gearcase	1
2	N/A	Cover	1
3	N/A	Gasket	1
4	-	Vent Plug	1
5	-	Drain/Fill Level Plug	2
6	N/A	Socket Head Cap Screw, M12	12
7	N/A	Hi-Collar Lockwasher, M12	12
8	N/A	Ball Bearing	1
9	N/A	External Retaining Ring	1
10	N/A	Intermediate Gear	1
11	N/A	Drum Pinion Shaft	1
12	N/A	Key	1
13	N/A	Ball Bearing	1
14	N/A	Ball Bearing	1
15	N/A	Intermediate Pinion Shaft	1
16	N/A	Key	1
17	N/A	Motor Gear	1
18	N/A	Ball Bearing	1
19	N/A	Ball Bearing	1
20	N/A	Output Shaft	1
21	N/A	Roller Bearing	1
22	N/A	Dowel Pin	2
23	N/A	Motor Shaft Oil Seal	1
24	N/A	Output Shaft Oil Seal	1
25	N/A	Torque Pin	2
26	N/A	Threaded Stud, M12	2

NOTES

HOOSIER CRANE SERVICE COMPANY

"D" Frame: Hoist Gearing for Figure 9-2. S4 & S2 Reeved			
REF. No.	**Part Number**	**Description**	**Qty. Req'd**
	44936501C	**Complete 15t Hoist Gearcase Ass'y. - 132.7:1 Ratio**	**1**
	44936590	**Gearcase Gasket/Seal Kit (Incl. Ref. Nos. 3, 23, 24)**	
	44936591	**Gearcase Gasket/Bearings Kit (Incl. Ref. Nos. 3, 8, 13, 14, 18, 19, 21, 23, 24)**	
1	N/A	Gearcase	1
2	N/A	Cover	1
3	N/A	Gasket	1
4	N/A	Vent Plug	1
5	N/A	Drain/Fill Level Plug	2
6a	N/A	Socket Head Cap Screw, M12	10
6b	N/A	Socket Head Shoulder Screw, M12 (not shown)	2
7	N/A	Hi-Collar Lockwasher, M12	12
8	N/A	Ball Bearing	1
9	N/A	External Retaining Ring	1
10	N/A	Intermediate Gear	1
11	N/A	Drum Pinion Shaft	1
12	N/A	Key	1
13	N/A	Ball Bearing	1
14	N/A	Ball Bearing	1
15	N/A	Intermediate Pinion Shaft	1
16	N/A	Key	1
17	N/A	Motor Gear	1
18	N/A	Ball Bearing	1
19	N/A	Ball Bearing	1
20	N/A	Output Shaft	1
21	N/A	Roller Bearing	1
22	N/A	Dowel Pin	2
23	N/A	Motor Shaft Oil Seal	1
24	N/A	Output Shaft Oil Seal	1
25	N/A	Torque Pin	2
26	N/A	Threaded Stud, M12	2

NOTES

HOOSIER CRANE SERVICE COMPANY

S4 & S2 REEVED

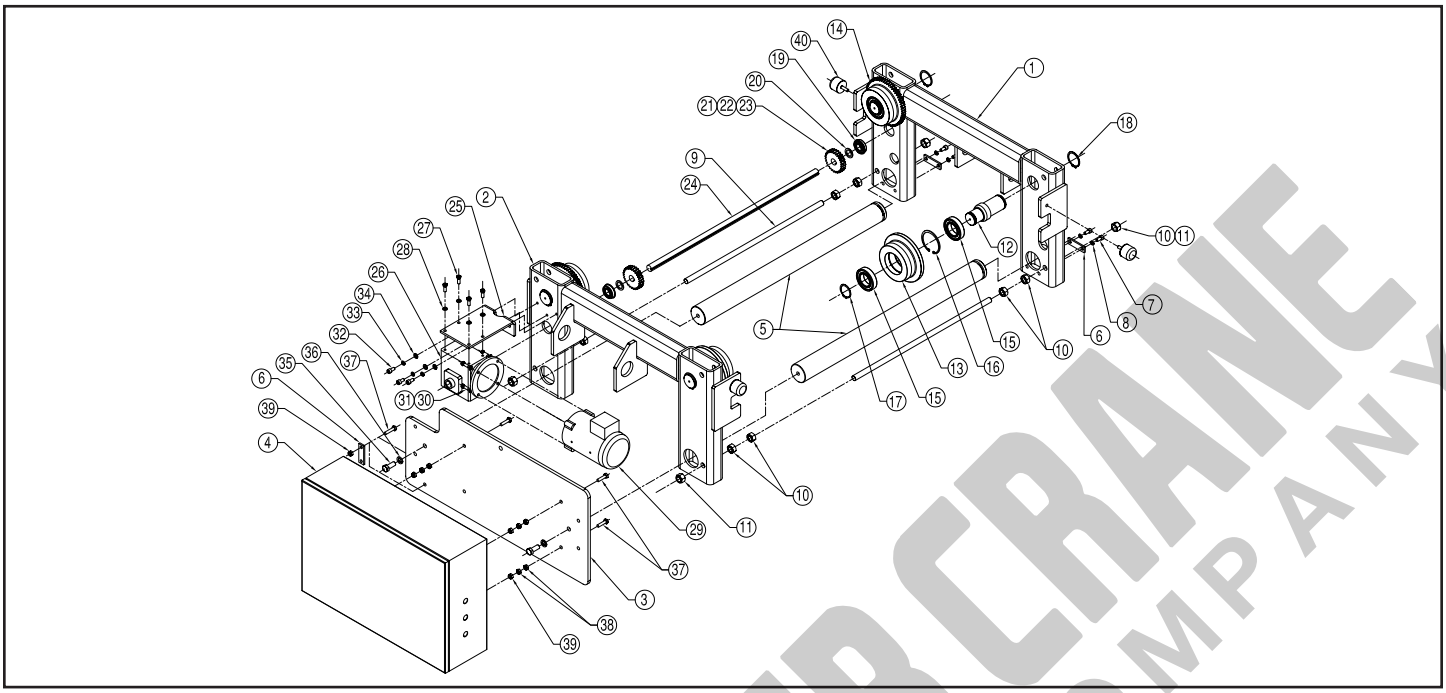

Figure 9-3. Motor Driven Trolley Frame and Drive (S4 Reeved "C" Frame Shown).

"B" Frame: Trolley Frame and Drive Components for Figure 9-3. S4 & S2 Reeved			
REF. No.	**Part Number**	**Description**	**Qty. Req'd**
	44931411	**Geared Wheel Assembly Pair (Incl. Ref. Nos. 12, 14, 15, 16, 17, 18)**	**1**
	44931412	**Plain Wheel Assembly Pair (Incl. Ref. Nos. 12, 13, 15, 16, 17, 18)**	
	44931413	**Geared Wheel Assembly Pair - 3.25" Pat Track (Incl. Ref. Nos. 12, 14, 15, 16, 17, 18)**	
	44931414	**Plain Wheel Assembly Pair - 3.25" Pat Track (Incl. Ref. Nos. 12, 14, 15, 16, 17, 18)**	
1	-	Trolley Frame Side	1
	N/A	Drum Side, 25' Lift Model	
	N/A	Drum Side, 40' Lift Model, 2 Part Reeved 80' Lift Model	
	N/A	Drum Side, 60' Lift Model	
2	-	Trolley Frame Side	1
	N/A	Traverse Drive Side, 25' Lift Model	
	N/A	Traverse Drive Side, 40' Lift Model, 2 Part Reeved 80' Lift Model	
	N/A	Traverse Drive Side, 60' Lift Model	
3	-	Counterweight Plate	1
	N/A	Counterweight, 25' Lift Model	
	N/A	Counterweight, 40' Lift Model, 2 Part Reeved 80' Lift Model	
	N/A	Counterweight, 60' Lift Model	
4	-	Hoist /Trolley Controls (Specify HP, Voltage, Frequency, No. of Speeds, Options)	1
5	-	Alignment Bar	2
	23384201	Alignment Bar, 4-5/8" Thru 8" Flange Width (4 Part Reeved), 4-5/8" Thru 6" Flange Width (2 Part Reeved)	
	23384202	Alignment Bar, 8-1/8" Thru 14" Flange Width (4 Part Reeved), 6-1/8" Thru 12" Flange Width (2 Part Reeved)	
	23384203	Alignment Bar, 14-1/8" Thru 20" Flange Width (4 Part Reeved), 12-1/8" Thru 18" Flange Width (2 Part Reeved)	
6	N/A	Key Plate	3
7	N/A	Socket Head Cap Screw, M10	4
8	N/A	Lockwasher, M10	4
9	-	Threaded Rod, M16	2
	10424754	Threaded Rod, 4-5/8" Thru 8" Flange Width (4 Part Reeved), 4-5/8" Thru 6" Flange Width (2 Part Reeved)	
	10424755	Threaded Rod , 8-1/8" Thru 14" Flange Width (4 Part Reeved), 6-1/8" Thru 12" Flange Width (2 Part Reeved)	
	10424756	Threaded Rod, 14-1/8" Thru 20" Flange Width (4 Part Reeved), 12-1/8" Thru 18" Flange Width (2 Part Reeved)	
10	N/A	Plain Hex Nut, M16	12
11	N/A	Lockwasher, M16	4
12	N/A	Wheel Axle	4
13	N/A	Plain Trolley Wheel	2
14	N/A	Geared Trolley Wheel	2
15	N/A	Ball Bearing	8

(continued on next page)

"B" Frame: Trolley Frame and Drive Components for Figure 9-3. S4 & S2 Reeved			
REF. No.	**Part Number**	**Description**	**Qty. Req'd**
16	N/A	Internal Retaining Ring	4
17	N/A	External Retaining Ring	4
18	N/A	External Retaining Ring	4
19	N/A	Ball Bearing w/Retaining Ring	2
20	N/A	Flat Washer	2
21	N/A	Traverse Pinion	2
22	N/A	Key	2
23	N/A	Set Screw, M6	4
24	-	Traverse Cross Shaft	1
	23382901	Cross Shaft, 4-5/8" Thru 8" Flange Width (4 Part Reeved), 4-5/8" Thru 6" Flange Width (2 Part Reeved)	
	23382902	Cross Shaft, 8-1/8" Thru 14" Flange Width (4 Part Reeved), 6-1/8" Thru 12" Flange Width (2 Part Reeved)	
	23382903	Cross Shaft, 14-1/8" Thru 20" Flange Width (4 Part Reeved), 12-1/8" Thru 18" Flange Width (2 Part Reeved)	
25	N/A	Torque Arm	1
26	-	Traverse Reducer	1
	905378	Traverse Reducer, 55 FPM	
	905377	Traverse Reducer, 75 FPM	
27	N/A	Socket Head Cap Screw, 5/16"-18	4
28	N/A	Lockwasher, 5/16"	4
29	SEE CHART	Traverse Motor	1
30	N/A	Hex Head Bolt, 3/8"-16	4
31	N/A	Lockwasher, 3/8"	4
32	N/A	Socket Head Cap Screw, M10	2
33	N/A	Lockwasher, M10	2
34	N/A	Flat Washer, M10	2
35	N/A	Hex Head Bolt, M16	2
36	N/A	Lockwasher, M16	2
37	N/A	Hex Head Bolt, 3/8	5
38	N/A	Plain Hex Nut, 3/8	4
39	N/A	Locknut, 3/8	5
40	11680704	Bumper (Optional)	4

"C" Frame: Trolley Frame and Drive Components for Figure 9-3. S4 & S2 Reeved			
REF. No.	**Part Number**	**Description**	**Qty. Req'd**
	44934411	**Geared Wheel Assembly Pair (Incl. Ref. Nos. 12, 14, 15, 16, 17, 18)**	
	44934412	**Plain Wheel Assembly Pair (Incl. Ref. Nos. 12, 13, 15, 16, 17, 18)**	
1	-	Trolley Frame Side	1
	N/A	Drum Side, 25' Lift Model	
	N/A	Drum Side, 40' Lift Model, 2 Part Reeved 80' Lift Model	
	N/A	Drum Side, 60' Lift Model	
2	-	Trolley Frame Side	1
	N/A	Traverse Drive Side, 25' Lift Model	
	N/A	Traverse Drive Side, 40' Lift Model, 2 Part Reeved 80' Lift Model	
	N/A	Traverse Drive Side, 60' Lift Model	
3	-	Counterweight Plate	1
	N/A	Counterweight, 25' Lift Model	
	N/A	Counterweight, 40' Lift Model, 2 Part Reeved 80' Lift Model	
	N/A	Counterweight, 60' Lift Model	
4	-	Hoist /Trolley Controls (Specify HP, Voltage, Frequency, No. of Speeds, Options)	1
5	-	Alignment Bar	2
	23387301	Alignment Bar, 6" Thru 8" Flange Width (4 Part Reeved), 4-5/8" Thru 6" Flange Width (2 Part Reeved)	
	23387302	Alignment Bar, 8-1/8" Thru 14" Flange Width (4 Part Reeved), 6-1/8" Thru 12" Flange Width (2 Part Reeved)	
	23387303	Alignment Bar, 14-1/8" Thru 20" Flange Width (4 Part Reeved), 12-1/8" Thru 18" Flange Width (2 Part Reeved)	
	23387304	Alignment Bar, 20-1/8" Thru 26" Flange Width (4 Part Reeved), 18-1/8" Thru 24" Flange Width (2 Part Reeved)	
6	N?A	Key Plate	3
7	N/A	Socket Head Cap Screw, M10	4
8	N/A	Lockwasher, M10	4
9	-	Threaded Rod, M20	2
	10424757	Threaded Rod, 6" Thru 8" Flange Width (4 Part Reeved), 4-5/8" Thru 6" Flange Width (2 Part Reeved)	
	10424758	Threaded Rod , 8-1/8" Thru 14" Flange Width (4 Part Reeved), 6-1/8" Thru 12" Flange Width (2 Part Reeved)	
	10424759	Threaded Rod, 14-1/8" Thru 20" Flange Width (4 Part Reeved), 12-1/8" Thru 18" Flange Width (2 Part Reeved)	
	10424763	Threaded Rod, 20-1/8" Thru 26" Flange Width (4 Part Reeved), 18-1/8" Thru 24" Flange Width (2 Part Reeved)	

(continued on next page)

"C" Frame: Trolley Frame and Drive Components for Figure 9-3. S4 & S2 Reeved			
REF. No.	**Part Number**	**Description**	**Qty. Req'd**
10	N/A	Plain Hex Nut, M20	12
11	N/A	Lockwasher, M20	4
12	N/A	Wheel Axle	4
13	N/A	Plain Trolley Wheel	2
14	N/A	Geared Trolley Wheel	2
15	N/A	Ball Bearing	8
16	N/A	Internal Retaining Ring	4
17	N/A	External Retaining Ring	4
18	N/A	External Retaining Ring	4
19	N/A	Ball Bearing w/Retaining Ring	2
20	N/A	Flat Washer	2
21	N/A	Traverse Pinion	2
22	N/A	Key	2
23	N/A	Set Screw, M6	4
24	-	Traverse Cross Shaft	1
	23382904	Cross Shaft, 6" Thru 8" Flange Width (4 Part Reeved), 4-5/8" Thru 6" Flange Width (2 Part Reeved)	
	23382905	Cross Shaft, 8-1/8" Thru 14" Flange Width (4 Part Reeved), 6-1/8" Thru 12" Flange Width (2 Part Reeved)	
	23382906	Cross Shaft, 14-1/8" Thru 20" Flange Width (4 Part Reeved), 12-1/8" Thru 18" Flange Width (2 Part Reeved)	
	23382909	Cross Shaft, 20-1/8" Thru 26" Flange Width (4 Part Reeved), 18-1/8" Thru 24" Flange Width (2 Part Reeved)	
25	N/A	Torque Arm	1
26	-	Traverse Reducer	1
	33292001	Traverse Reducer, 50 FPM	
	33292002	Traverse Reducer, 80 FPM	
27	N/A	Hex Head Bolt, 3/8"-16	4
28	N/A	Lockwasher, 3/8"	4
29	SEE CHART	Traverse Motor	1
30	N/A	Hex Head Bolt, 3/8"-16	4
31	N/A	Lockwasher, 3/8"	4
32	N/A	Socket Head Cap Screw, M10	3
33	N/A	Lockwasher, M10	3
34	N/A	Flat Washer, M10	3
35	N/A	Hex Head Bolt, M16	2
36	N/A	Lockwasher, M16	2
37	N/A	Hex Head Bolt, 3/8	5
38	N/A	Plain Hex Nut, 3/8	8
39	N/A	Locknut, 3/8	5
40	11680701	Bumper (Optional)	4

"D" Frame: Trolley Frame and Drive Components for Figure 9-3. S4 & S2 Reeved			
REF. No.	**Part Number**	**Description**	**Qty. Req'd**
	44937911	**Geared Wheel Assembly Pair (Incl. Ref. Nos. 12, 14, 15, 16, 17, 18)**	
	44937912	**Plain Wheel Assembly Pair (Incl. Ref. Nos. 12, 13, 15, 16, 17, 18)**	
1	-	Trolley Frame Side	1
	N/A	Drum Side, 25' Lift Model	
	N/A	Drum Side, 40' Lift Model, 2 Part Reeved 80' Lift Model	
	N/A	Drum Side, 60' Lift Model	
2	-	Trolley Frame Side	1
	N/A	Traverse Drive Side, 25' Lift Model	
	N/A	Traverse Drive Side, 40' Lift Model, 2 Part Reeved 80' Lift Model	
	N/A	Traverse Drive Side, 60' Lift Model	
3	-	Counterweight Plate	1
	N/A	Counterweight, 25' Lift Model	
	N/A	Counterweight, 40' Lift Model, 2 Part Reeved 80' Lift Model	
	N/A	Counterweight, 60' Lift Model	
4	-	Hoist /Trolley Controls (Specify HP, Voltage, Frequency, No. of Speeds, Options)	1
5	-	Alignment Bar	2
	23392501	Alignment Bar, 4-5/8" Thru 8" Flange Width (4 Part Reeved)	
	23392502	Alignment Bar, 8" Thru 14" Flange Width (4 Part Reeved), 8" Thru 12" Flange Width (2 Part Reeved)	
	23392503	Alignment Bar, 14-1/8" Thru 20" Flange Width (4 Part Reeved), 12-1/8" Thru 18" Flange Width (2 Part Reeved)	
6	N/A	Key Plate	3
7	N/A	Socket Head Cap Screw, M10	4

(continued on next page)

HUBER CRANE SERVICE COMPANY

"D" Frame: Trolley Frame and Drive Components for Figure 9-3. S4 & S2 Reeved			
REF. No.	Part Number	Description	Qty. Req'd
8	N/A	Lockwasher, M10	4
9	-	Threaded Rod, M20	2
	10424757	Threaded Rod, 4-5/8" Thru 8" Flange Width (4 Part Reeved)	
	10424758	Threaded Rod , 8" Thru 14" Flange Width (4 Part Reeved), 8" Thru 12" Flange Width (2 Part Reeved)	
	10424759	Threaded Rod, 14-1/8" Thru 20" Flange Width (4 Part Reeved), 12-1/8" Thru 18" Flange Width (2 Part Reeved)	
10	N/A	Plain Hex Nut, M20	12
11	N/A	Lockwasher, M20	4
12	N/A	Wheel Axle	4
13	N/A	Plain Trolley Wheel	2
14	N/A	Geared Trolley Wheel	2
15	N/A	Ball Bearing	8
16	N/A	Internal Retaining Ring	4
17	N/A	External Retaining Ring	4
18	N/A	External Retaining Ring	4
19	N/A	Ball Bearing w/Retaining Ring	2
20	N/A	Flat Washer	2
21	N/A	Traverse Pinion	2
22	N/A	Key	2
23	N/A	Set Screw, M6	4
24	-	Traverse Cross Shaft	1
	23382904	Cross Shaft, 4-5/8" Thru 8" Flange Width (4 Part Reeved)	
	23382905	Cross Shaft, 8" Thru 14" Flange Width (4 Part Reeved), 8" Thru 12" Flange Width (2 Part Reeved)	
	23382906	Cross Shaft, 14-1/8" Thru 20" Flange Width (4 Part Reeved), 12-1/8" Thru 18" Flange Width (2 Part Reeved)	
25	N/A	Torque Arm	1
26	-	Traverse Reducer	1
	33293801	Traverse Reducer, 50 FPM	
	33293802	Traverse Reducer, 80 FPM	
27	N/A	Socket Head Cap Screw, 3/8"-16	4
28	N/A	Lockwasher, 3/8"-16	4
29	SEE CHART	Traverse Motor	1
30	N/A	Hex Head Bolt, 3/8"-16	4
31	N/A	Lockwasher, 3/8"	4
32	N/A	Socket Head Cap Screw, M10	2
33	N/A	Lockwasher, M10	2
34	N/A	Flat Washer, M10	2
35	N/A	Hex Head Bolt, M20	2
36	N/A	Lockwasher, M20	2
37	N/A	Hex Head Bolt, 3/8	5
38	N/A	Plain Hex Nut, 3/8	4
39	N/A	Locknut, 3/8	5
40	11680701	Bumper (Optional)	4

2-SPEED TROLLEY MOTORS

MOTOR .5/.17 HP 1800/600 RPM	B FRAME 5 TONNE (S4 REEVING) 2-1/2 TONNE (S2 REEVING)	MOTOR .75/.25 HP 1800/600 RPM	C FRAME 7-1/2 & 10 TONNE (S4 REEVING) 3-3/4 & 5 TONNE (S2 REEVING)	MOTOR 1/.33 HP 1800/600 RPM	D FRAME 15 TONNE (S4 REEVING) 7-1/2 TONNE (S2 REEVING)	MOTOR 1/.33 HP 1800/600 RPM	D FRAME with Brake* 15 TONNE (S4 REEVING) 7-1/2 TONNE (S2 REEVING)
POWER SUPPLY	PART NUMBER	POWER SUPPLY	PART NUMBER	POWER SUPPLY	PART NUMBER	POWER SUPPLY	PART NUMBER
208V-3PH-60HZ	32879624	208V-3PH-60HZ	32879634	208V-3PH-60HZ	32879644	208V-3PH-60HZ	33198201
230V-3PH-60HZ	32879625	230V-3PH-60HZ	32879635	230V-3PH-60HZ	32879645	230V-3PH-60HZ	33198202
460V-3PH-60HZ	32879626	460V-3PH-60HZ	32879636	460V-3PH-60HZ	32879646	460V-3PH-60HZ	33198203
575V-3PH-60HZ	32879627	575V-3PH-60HZ	32879637	575V-3PH-60HZ	32879647	575V-3PH-60HZ	33198204
380V-3PH-50HZ	11704229	380V-3PH-50HZ	11704367	380V-3PH-50HZ	11704457	380V-3PH-50HZ	11704431

LODESTAR CRANE SERVICE COMPANY

MOTOR .75/.25 HP 1800/600 RPM	B FRAME 5 TONNE (S4 REEVING) 2-1/2 TONNE (S2 REEVING)	MOTOR 1/.33 HP 1800/600 RPM	C FRAME 7-1/2 & 10 TONNE (S4 REEVING) 3-3/4 & 5 TONNE (S2 REEVING)	MOTOR 1.5/.5 HP 1800/600 RPM	D FRAME 15 TONNE (S4 REEVING) 7-1/2 TONNE (S2 REEVING)	MOTOR 1.5/.5 HP 1800/600 RPM	D FRAME with Brake* 15 TONNE (S4 REEVING) 7-1/2 TONNE (S2 REEVING)
POWER SUPPLY	PART NUMBER	POWER SUPPLY	PART NUMBER	POWER SUPPLY	PART NUMBER	POWER SUPPLY	PART NUMBER
208V-3PH-60HZ	32879634	208V-3PH-60HZ	32879644	208V-3PH-60HZ	32879670	208V-3PH-60HZ	33198206
230V-3PH-60HZ	32879635	230V-3PH-60HZ	32879645	230V-3PH-60HZ	32879671	230V-3PH-60HZ	33198207
460V-3PH-60HZ	32879636	460V-3PH-60HZ	32879646	460V-3PH-60HZ	32879672	460V-3PH-60HZ	33198208
575V-3PH-60HZ	32879637	575V-3PH-60HZ	32879647	575V-3PH-60HZ	32879673	575V-3PH-60HZ	33198209
380V-3PH-50HZ	11704367	380V-3PH-50HZ	11704457	380V-3PH-50HZ	11704544	380V-3PH-50HZ	11704545

*Note: The D-frame model only uses a single shaft motor when furnished without brake and a double shaft motor when brake is included.

1-SPEED TROLLEY MOTORS †

MOTOR .5/.17 HP 1800/600 RPM	B FRAME 5 TONNE (S4 REEVING) 2-1/2 TONNE (S2 REEVING)	MOTOR .75/.25 HP 1800/600 RPM	C FRAME 7-1/2 & 10 TONNE (S4 REEVING) 3-3/4 & 5 TONNE (S2 REEVING)	MOTOR 1/.33 HP 1800/600 RPM	D FRAME WITHOUT BRAKE* 15 TONNE (S4 REEVING) 7-1/2 TONNE (S2 REEVING)	MOTOR 1/.33 HP 1800/600 RPM	D FRAME WITH BRAKE* 15 TONNE (S4 REEVING) 7-1/2 TONNE (S2 REEVING)
POWER SUPPLY	PART NUMBER	POWER SUPPLY	PART NUMBER	POWER SUPPLY	PART NUMBER	POWER SUPPLY	PART NUMBER
208V-3PH-60HZ	32879532	208V-3PH-60HZ	32879542	208V-3PH-60HZ	32879552	208V-3PH-60HZ	33198102
230V-3PH-60HZ	32879532	230V-3PH-60HZ	32879542	230V-3PH-60HZ	32879552	230V-3PH-60HZ	33198103
460V-3PH-60HZ	32879532	460V-3PH-60HZ	32879542	460V-3PH-60HZ	32879552	460V-3PH-60HZ	33198103
575V-3PH-60HZ	32879533	575V-3PH-60HZ	32879543	575V-3PH-60HZ	32879553	575V-3PH-60HZ	33198104
380V-3PH-50HZ	32879532	380V-3PH-50HZ	32879542	380V-3PH-50HZ	32879552	380V-3PH-50HZ	11705272

MOTOR .75/.25 HP 1800/600 RPM	B FRAME 5 TONNE (S4 REEVING) 2-1/2 TONNE (S2 REEVING)	MOTOR 1/.33 HP 1800/600 RPM	C FRAME 7-1/2 & 10 TONNE (S4 REEVING) 3-3/4 & 5 TONNE (S2 REEVING)	MOTOR 1.5/.5 HP 1800/600 RPM	D FRAME WITHOUT BRAKE* 15 TONNE (S4 REEVING) 7-1/2 TONNE (S2 REEVING)	MOTOR 1.5/.5 HP 1800/600 RPM	D FRAME WITH BRAKE* 15 TONNE (S4 REEVING) 7-1/2 TONNE (S2 REEVING)
POWER SUPPLY	PART NUMBER	POWER SUPPLY	PART NUMBER	POWER SUPPLY	PART NUMBER	POWER SUPPLY	PART NUMBER
208V-3PH-60HZ	32879542	208V-3PH-60HZ	32879552	208V-3PH-60HZ	32879590	208V-3PH-60HZ	33198107
230V-3PH-60HZ	32879542	230V-3PH-60HZ	32879552	230V-3PH-60HZ	32879590	230V-3PH-60HZ	33198108
460V-3PH-60HZ	32879542	460V-3PH-60HZ	32879552	460V-3PH-60HZ	32879590	460V-3PH-60HZ	33198108
575V-3PH-60HZ	32879543	575V-3PH-60HZ	32879553	575V-3PH-60HZ	32879591	575V-3PH-60HZ	33198109
380V-3PH-50HZ	32879542	380V-3PH-50HZ	32879552	380V-3PH-50HZ	N/A	380V-3PH-50HZ	N/A

† Also furnished with trolley VFC

*Note: The D-frame model only uses a single shaft motor when furnished without brake and a double shaft motor when brake is included.

SHAW-BOX CRANE SERVICE COMPANY

S4 REEVED

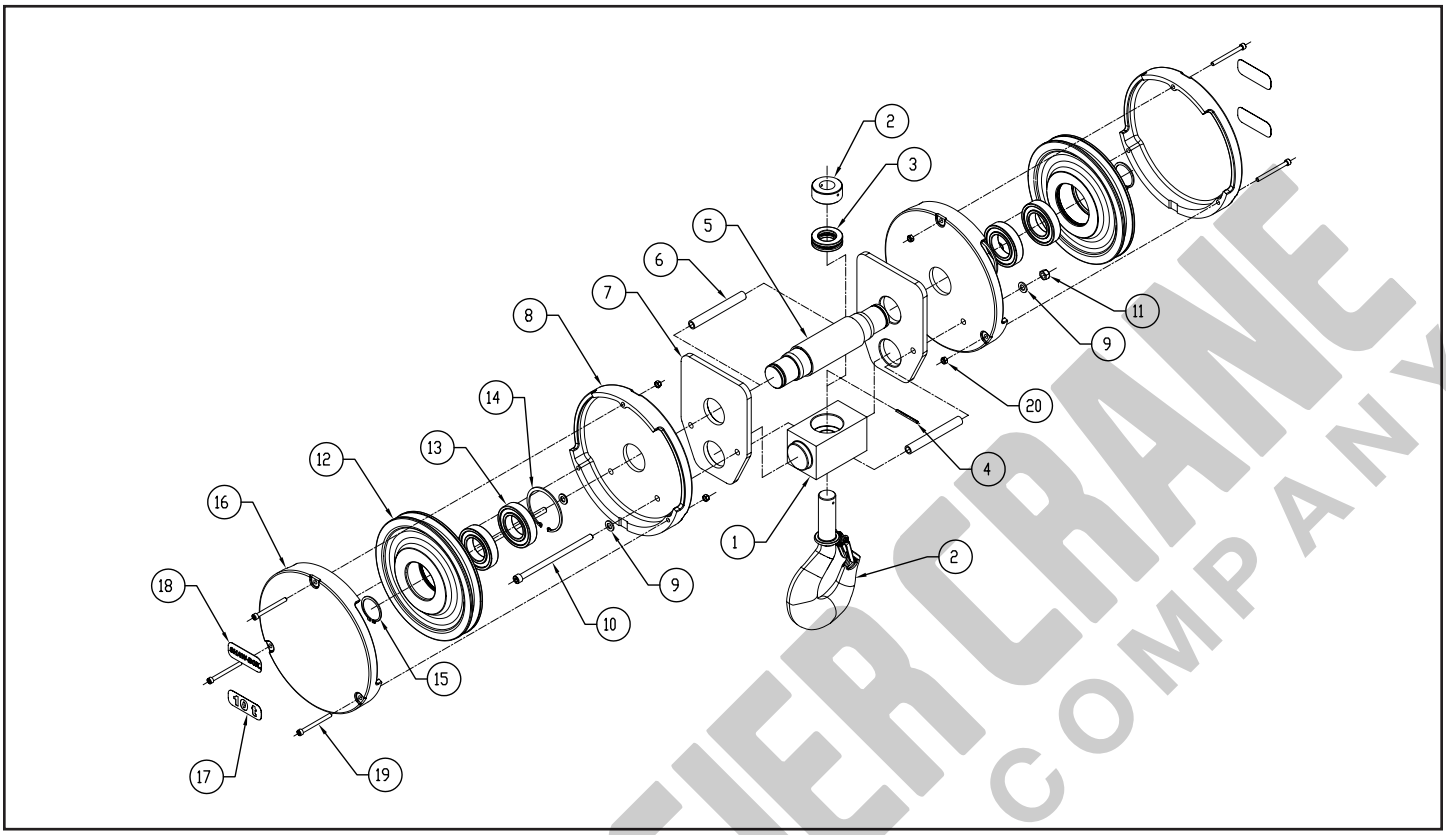

Figure 9-4a. Lower Block Assembly (S4 Reeved)

"B" Frame: Lower Block Components for Figure 9-4a. S4 Reeved			
REF. No.	**Part Number**	**Description**	**Qty. Req'd**
	44931901C	**Lower Block Assembly (Excludes Ref. Nos. 17 & 18)**	**1**
	33290601	**Sheave Assembly (Incl. Ref. Nos. 12, 13, 14)**	
	4X1309	**Hook Latch Kit (Not shown)**	
	23380691	**Hook Assembly (Incl. Ref. Nos. 2, 3, 4)**	
1	N/A	Trunnion Crosshead	1
2	N/A	Hook & Nut Assembly	1
3	N/A	Thrust Bearing	1
4	N/A	Roll Pin	1
5	N/A	Sheave Pin	1
6	N/A	Spacer Tube	2
7	N/A	Lower Block Strap	2
8	33290902	Inner Sheave Cover	2
9	N/A	Flat Washer, M8	4
10	N/A	Socket Head Cap Screw, M8	2
11	N/A	Locknut, M8	2
12	N/A	Rope Sheave	2
13	N/A	Ball Bearing	4
14	N/A	Internal Retaining Ring	2
15	N/A	External Retaining Ring	2
16	33290912	Outer Sheave Cover	2
17	23382810	5t Capacity Label	2
18a	23382801	SHAW-Box Brand Label	2
18b	23382802	YALE Brand Label	2
19	N/A	Socket Head Cap Screw, M6	6
20	N/A	Locknut, M6	6

MOSIER CRANE SERVICE COMPANY

"C" Frame: Lower Block Components for Figure 9-4a. S4 Reeved			
REF. No.	**Part Number**	**Description**	**Qty. Req'd**
	44934901C	**10t Lower Block Assembly (Excludes Ref. Nos. 17 & 18)**	**1**
	44934901C	**7.5t Lower Block Assembly (Excludes Ref. Nos. 17 & 18)**	**1**
	33292101	**Sheave Assembly (Incl. Ref. Nos. 12, 13, 14)**	
	4X1315	**Hook Latch Kit (Not shown)**	
	23389291	**Hook Assembly (Incl. Ref. Nos. 2, 3, 4)**	**1**
1	N/A	Trunnion Crosshead	1
2	N/A	Hook & Nut Assembly	1
3	N/A	Thrust Bearing	1
4	N/A	Roll Pin	1
5	N/A	Sheave Pin	1
6	N/A	Spacer Tube	2
7	N/A	Lower Block Strap	2
8	33291802	Inner Sheave Cover	2
9	N/A	Flat Washer, M12	4
10	N/A	Socket Head Cap Screw, M12	2
11	N/A	Locknut, M12	2
12	N/A	Rope Sheave	2
13	N/A	Ball Bearing	4
14	N/A	Internal Retaining Ring	2
15	N/A	External Retaining Ring	2
16	33291812	Outer Sheave Cover	2
17	-	Capacity Label	2
	23282812	10t Capacity Plate	
	23382811	7.5t Capacity Plate	
18a	23382801	SHAW-BOX Brand Label	2
18b	23382802	YALE Brand Label	2
19	N/A	Socket Head Cap Screw, M8	6
20	N/A	Locknut, M8	6

"D" Frame: Lower Block Components for Figure 9-4a. S4 Reeved			
REF. No.	**Part Number**	**Description**	**Qty. Req'd**
	44936901C	**Lower Block Assembly (Excludes Ref. Nos. 17 & 18)**	**1**
	33293701	**Sheave Assembly (Incl. Ref. Nos. 12, 13, 14)**	
	4X1322	**Hook Latch Kit (Not shown)**	
	23394091	**Hook Assembly (Incl. Ref. Nos. 2, 3, 4)**	
1	N/A	Trunnion Crosshead	1
2	N/A	Hook & Nut Assembly	1
3	N/A	Thrust Bearing	1
4	N/A	Roll Pin	1
5	N/A	Sheave Pin	1
6	N/A	Spacer Tube	2
7	N/A	Lower Block Strap	2
8	33292801	Inner Sheave Cover	2
9	N/A	Flat Washer, M12	4
10	N/A	Threaded Stud, M12	2
11	N/A	Locknut, M12	2
12	N/A	Rope Sheave	2
13	N/A	Ball Bearing	4
14	N/A	Internal Retaining Ring	2
15	N/A	External Retaining Ring	2
16	33292811	Outer Sheave Cover	2
17	23391525	15t Capacity Label	2
18a	23391501	SHAW-BOX Brand Label	2
18b	23391502	YALE Brand Label	2
19	N/A	Socket Head Cap Screw, M8	6
20	N/A	Locknut, M8	6

MOSIER CRANE SERVICE COMPANY

S2 REEVED

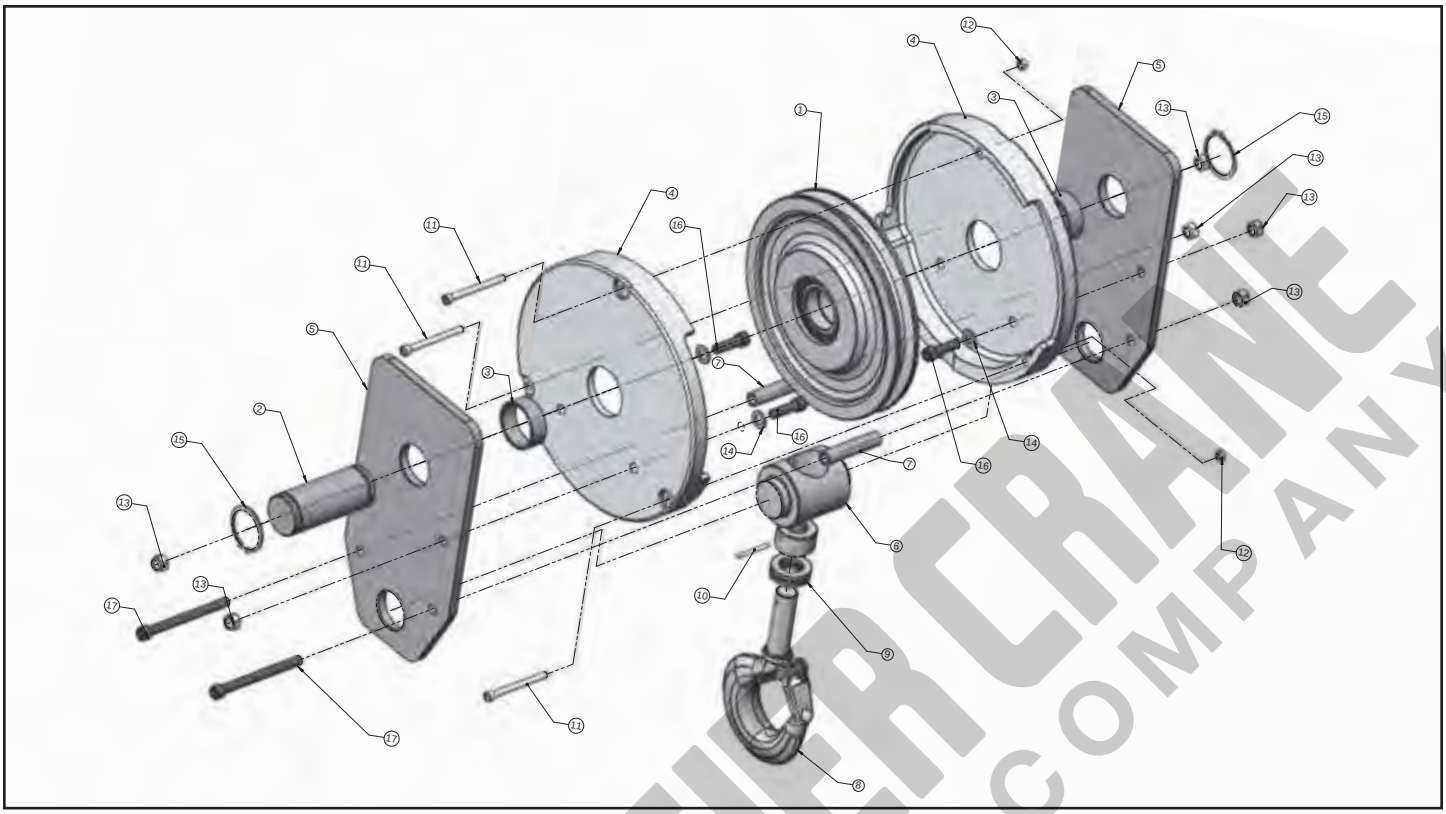

Figure 9-4b. Lower Block Assembly (S2 Reeved)

"B", "C" & "D" Frame: Lower block components for Figure 9-4b (S2 Reeved)						
REF. No.	**"B" Frame Part Number**	**"C" Frame Part Number**	**"C" Frame Part Number**	**"D" Frame Part Number**	**Description**	**Qty. Req'd**
	45410301C	**45410901C**	**45410901C**	**45411801C**	**Lower Block Assembly (Does not include Ref Nos. 18-20)**	**1**
	4X1307	**4X1309**	**4X1309**	**4X1315**	**Hook Latch Kit (Not Shown)**	**1**
	23398001	**23380601**	**23380601**	**23389201**	**Hook Assembly (Includes Ref Nos. 8-10)**	**1**
1	**33290601**	**33292101**	**33292101**	**33293701**	**Sheave and Bearing Assembly**	**1**
2	N/A	N/A	N/A	N/A	Sheave Pin	1
3	N/A	N/A	N/A	N/A	Sheave Spacer	2
4	33290902	33291802	33291802	33292801	Inside Sheave Cover	2
5	N/A	N/A	N/A	N/A	Lower Block Strap	2
6	N/A	N/A	N/A	N/A	Crosshead Trunnion	1
7	N/A	N/A	N/A	N/A	Crosshead Spacer	2
8	N/A	N/A	N/A	N/A	Hook and Nut Assembly	1
9	N/A	N/A	N/A	N/A	Thrust Ball Bearing	1
10	N/A	N/A	N/A	N/A	Spring Pin	1
11	N/A	N/A	N/A	N/A	Cap Screw	3
12	N/A	N/A	N/A	N/A	Locking Nut	3
13	N/A	N/A	N/A	N/A	Locking Nut	6
14	N/A	N/A	N/A	N/A	Flat Washer	4
15	N/A	N/A	N/A	N/A	External Retaining Ring	2
16	N/A	N/A	N/A	N/A	Cap Screw	4
17	N/A	N/A	N/A	N/A	Cap Screw	2
18	23382829	23382830	23382810	23391511	Capacity Label (Not Shown)	2
19	23382801	23382801	23382801	23391501	Shaw-Box Brand Label (Not Shown)	2
20	23382802	23382802	23382802	23391502	YALE Brand Label (Not Shown)	2

MOSER CRANE SERVICE COMPANY

S4 REEVED

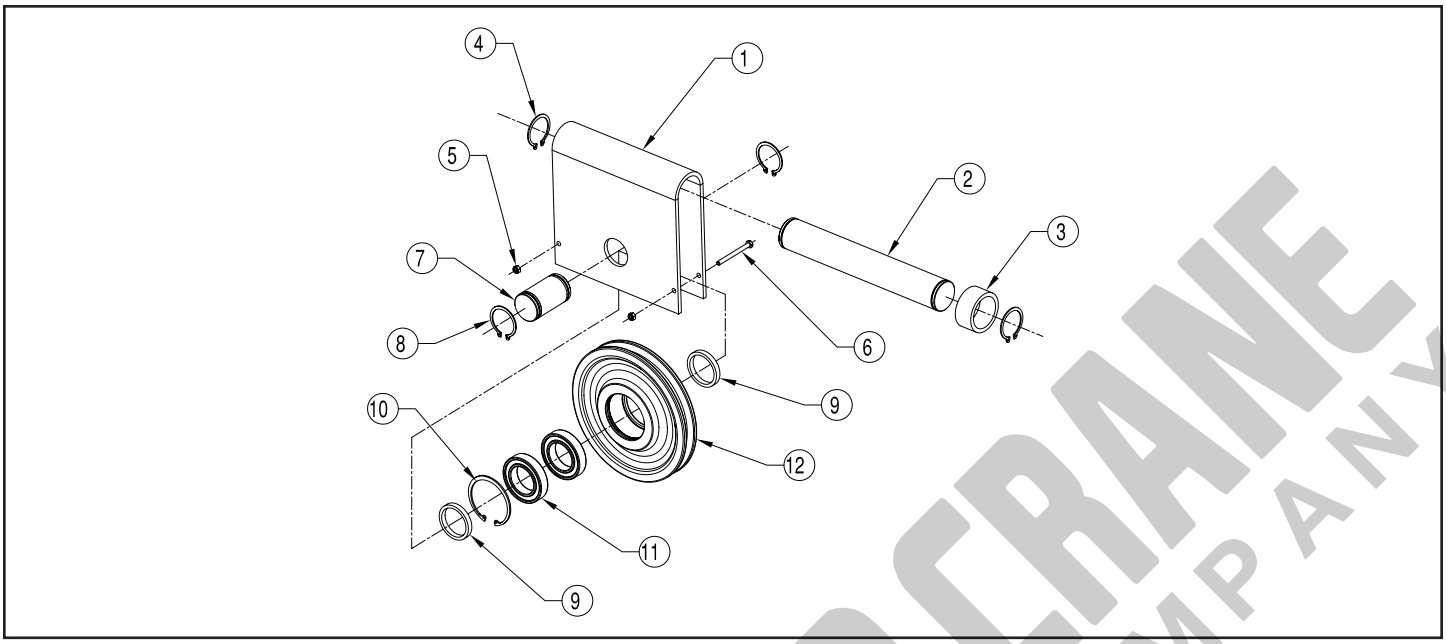

Figure 9-5. Upper Block Assembly (S4 Reeved)

"B" Frame: Upper Block Components for Figure 9-5. S4 Reeved			
REF. No.	**Part Number**	**Description**	**Qty. Req'd**
	44932701	**"B" Frame Hoist Upper Block Assembly**	**1**
	33290601	**Sheave Assembly (Incl. Ref. Nos. 10, 11, 12)**	
1	N/A	Upper Block Yoke	1
2	N/A	Yoke Pin	1
3	N/A	Yoke Spacer ("B" Frame Only)	1
4	N/A	External Retaining Ring	2
5	N/A	Locknut, M6	2
6	N/A	Hex Head Bolt, M6	2
7	N/A	Sheave Pin	1
8	N/A	External Retaining Ring	2
9	N/A	Spacer Washer	2
10	N/A	Internal Retaining Ring	1
11	N/A	Sealed Ball Bearing	2
12	N/A	Rope Sheave	1

"C" Frame: Upper Block Components for Figure 9-5. S4 Reeved			
REF. No.	**Part Number**	**Description**	**Qty. Req'd**
	44934601C	**"C" Frame Hoist Upper Block Assembly**	**1**
	33292101	**Sheave Assembly (Incl. Ref. Nos. 10, 11, 12)**	
1	N/A	Upper Block Yoke	1
2	N/A	Yoke Pin	1
3	N/A	Yoke Spacer (Not Required on "C" Frame)	0
4	N/A	External Retaining Ring	2
5	N/A	Locknut, M6	2
6	N/A	Hex Head Bolt, M6	2
7	N/A	Sheave Pin	1
8	N/A	External Retaining Ring	2
9	N/A	Spacer Washer	2
10	N/A	Internal Retaining Ring	1
11	N/A	Sealed Ball Bearing	2
12	N/A	Rope Sheave	1

HOOSIER CRANE SERVICE COMPANY

"D" Frame: Upper Block Components for Figure 9-5. S4 Reeved			
REF. No.	**Part Number**	**Description**	**Qty. Req'd**
	44936601C	**"D" Frame Hoist Upper Block Assembly**	**1**
	33293701	**Sheave Assembly (Incl. Ref. Nos. 10, 11, 12)**	
1	N/A	Upper Block Yoke	1
2	N/A	Yoke Pin	1
3	N/A	Yoke Spacer (Not Required on "D" Frame)	0
4	N/A	External Retaining Ring	2
5	N/A	Locknut, M10	2
6	N/A	Hex Head Bolt, M10	2
7	N/A	Sheave Pin	1
8	N/A	External Retaining Ring	2
9	N/A	Spacer Washer	2
10	N/A	Internal Retaining Ring	1
11	N/A	Sealed Ball Bearing	2
12	N/A	Rope Sheave	1

NOTES

HOOSIER CRANE SERVICE COMPANY

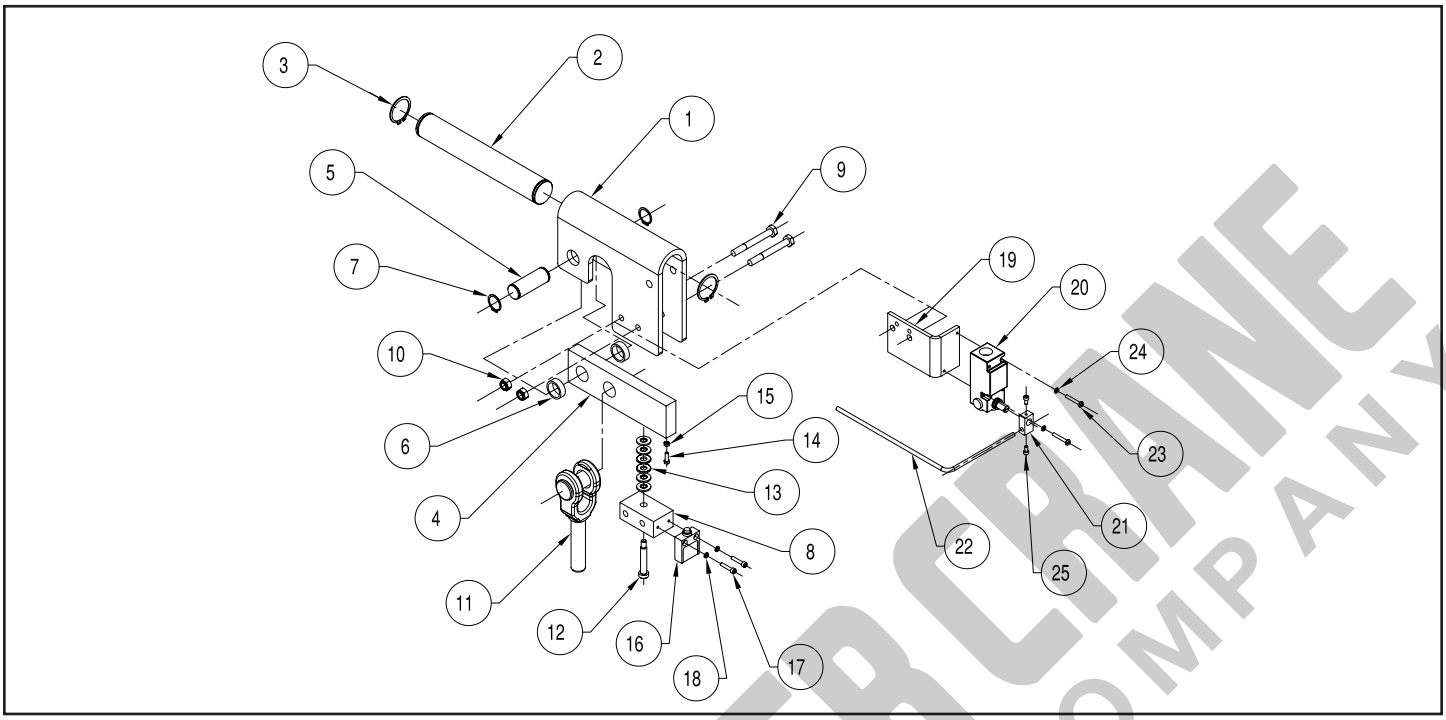

Figure 9-6a. Wire Rope Dead End Assembly with Limit Switch ("B" & "C" Frame) (S4 Reeved)

"B" Frame: Wire Rope Dead End Assembly Components for Figure 9-6a. S4 Reeved			
REF. No.	**Part Number**	**Description**	**Qty. Req'd**
	44932801C	**"B" Frame Hoist Rope and Dead End Assembly (Excl. Ref. Nos. 11, 19 - 25)**	**1**
1	N/A	Dead End Yoke	1
2	N/A	Yoke Pin	1
3	N/A	External Retaining Ring	2
4	N/A	Overload Beam	1
5	N/A	Dead End Pin	1
6	N/A	Spacer	2
7	N/A	External Retaining Ring	2
8	N/A	Overload Spring Base	1
9	N/A	Hex Head Bolt, M6	2
10	N/A	Locknut, M6	2
11	-	Wire Rope and Swaged End Assembly	1
	23383601	Rope Assembly, 25' Lift Model, 9mm	
	23383602	Rope Assembly, 40' Lift Model, 9mm	
	23383605	Rope Assembly, 60' Lift Model, 9mm	
12	N/A	Socket Head Shoulder Bolt, M8 Thread	1
13	N/A	Belleville Spring Washer	4
14	N/A	Hex Head Bolt, M5	1
15	N/A	Plain Hex Nut, M5	1
16	N/A	Limit Switch	1
17	N/A	Socket Head Cap Screw, M5	2
18	N/A	Hi-Collar Lockwasher	2
	33290501C	**"B" Frame Block Operated Limit Switch**	**1**
19	N/A	Limit Switch Bracket	1
20	N/A	Limit Switch	1
21	N/A	Limit Switch Hub	1
22	N/A	Actuator Rod	1
23	N/A	Pan Head Screw, #10	2
24	N/A	Lockwasher, #10	2
25	N/A	Socket Head Cap Screw, #10	2

MOORE CRANE SERVICE COMPANY

"C" Frame: Wire Rope Dead End Assembly Components for Figure 9-6a. S4 Reeved			
REF. No.	**Part Number**	**Description**	**Qty. Req'd**
	44934701C	**"C" Frame Hoist Rope and Dead End Assembly (Excl. Ref. Nos. 11, 19 - 25)**	**1**
1	N/A	Dead End Yoke	1
2	N/A	Yoke Pin	1
3	N/A	External Retaining Ring	2
4	N/A	Overload Beam	1
5	N/A	Dead End Pin	1
6	N/A	Spacer	2
7	N/A	External Retaining Ring	2
8	N/A	Overload Spring Base	1
9	N/A	Hex Head Bolt, M10	2
10	N/A	Locknut, M10	2
11	-	Wire Rope and Swaged End Assembly	1
	23386501	Rope Assembly, 25' Lift Model, 12mm	
	23386502	Rope Assembly, 40' Lift Model, 12mm	
	23386505	Rope Assembly, 60' Lift Model, 12mm	
12	N/A	Socket Head Shoulder Bolt, M8 Thread	1
13	N/A	Belleville Spring Washer	6
14	N/A	Hex Head Bolt, M5	1
15	N/A	Plain Hex Nut, M5	1
16	N/A	Limit Switch	1
17	N/A	Socket Head Cap Screw, M5	2
18	N/A	Hi-Collar Lockwasher	2
	33290501C	**"C" Frame Block Operated Limit Switch**	**1**
19	N/A	Limit Switch Bracket	1
20	N/A	Limit Switch	1
21	N/A	Limit Switch Hub	1
22	N/A	Actuator Rod	1
23	N/A	Pan Head Screw, #10	2
24	N/A	Lockwasher, #10	2
25	N/A	Socket Head Cap Screw, #10	2

NOTES

HOOSIER CRANE SERVICE COMPANY

S4 REEVED

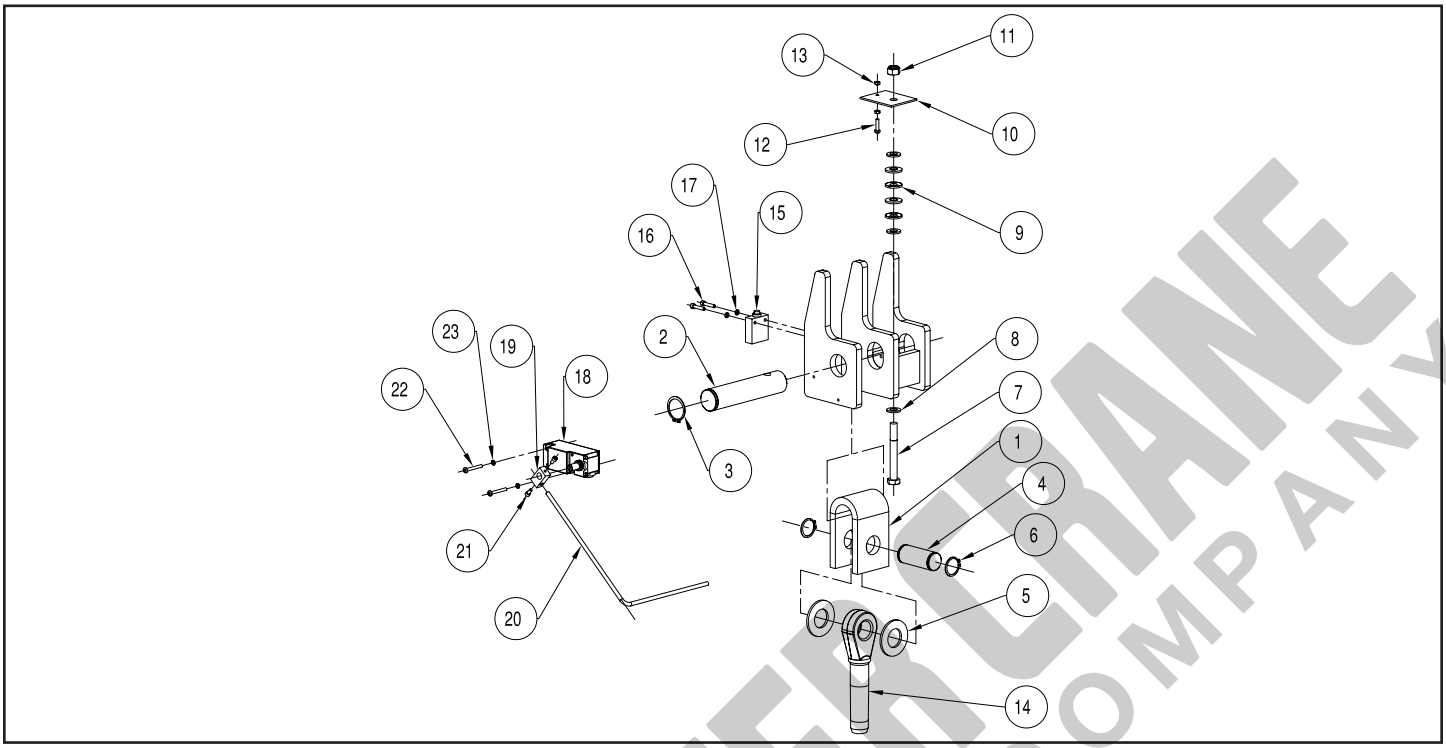

Figure 9-6b. Wire Rope Dead End Assembly with Limit Switch ("D" Frame) (S4 Reeved)

"D" Frame: Wire Rope Dead End Assembly Components for Figure 9-6b. S4 Reeved			
REF. No.	**Part Number**	**Description**	**Qty. Req'd**
	44937001C	**"D" Frame Hoist Rope and Dead End Assembly (Excl. Ref. Nos. 14)**	**1**
1	N/A	Dead End Yoke	1
2	N/A	Yoke Pin	1
3	N/A	External Retaining Ring	1
4	N/A	Dead End Pin	1
5	N/A	Spacer	2
6	N/A	External Retaining Ring	2
7	N/A	Hex Head Bolt, M12	1
8	N/A	Flat Washer, M12	3
9	N/A	Belleville Spring Washer	4
10	N/A	Overload Plate	1
11	N/A	Locknut, M12	1
12	N/A	Hex Head Bolt, M5	1
13	N/A	Plain Hex Nut, M5	2
14	-	Wire Rope and Swaged End Assembly	1
	23393901	Rope Assembly, 25' Lift Model, 15mm	
	23393902	Rope Assembly, 40' Lift Model, 15mm	
	23393905	Rope Assembly, 60' Lift Model, 15mm	
15	N/A	Limit Switch	1
16	N/A	Socket Head Cap Screw, M5	2
17	N/A	Hi-Collar Lockwasher, M5	2
	33290504C	**"D" Frame Block Operated Limit Switch**	**1**
18	N/A	Limit Switch	1
19	N/A	Limit Switch Hub	1
20	N/A	Actuator Rod	1
21	N/A	Socket Head Cap Screw, #10	2
22	N/A	Pan Head Screw, #10	2
23	N/A	Lockwasher, #10	2

HOOSIER CRANE SERVICE COMPANY

S2 REEVED

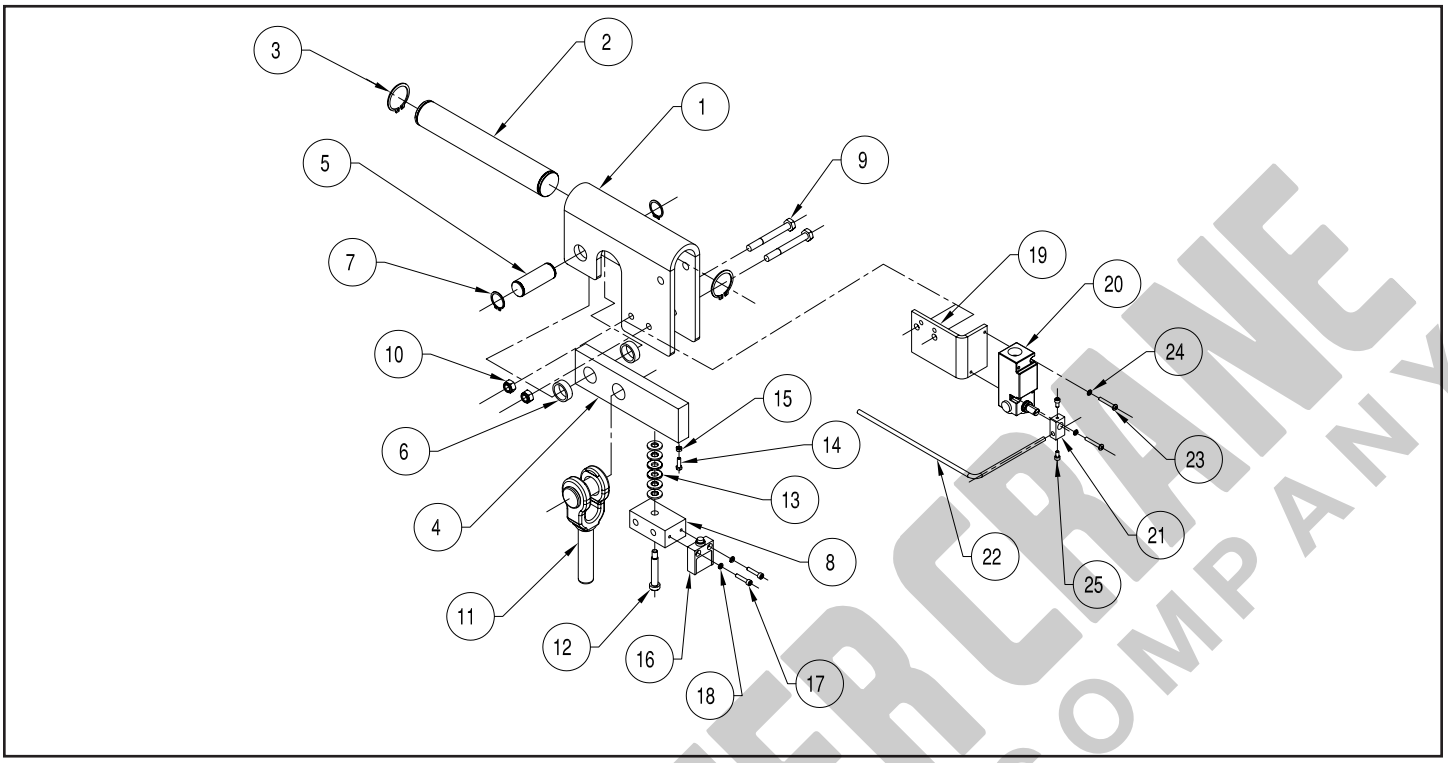

Figure 9-6c. Wire Rope Dead End Assembly with Limit Switch ("B" & "C" Frame) (S2 Reeved)

"B" Frame: Wire Rope Dead End Assembly Components for Figure 9-6c. S2 Reeved			
REF. No.	**Part Number**	**Description**	**Qty. Req'd**
	44932801C	**"B" Frame Hoist Rope and Dead End Assembly (Excl. Ref. Nos. 11, 19 - 25)**	**1**
1	N/A	Dead End Yoke	1
2	N/A	Yoke Pin	1
3	N/A	External Retaining Ring	2
4	N/A	Overload Beam	1
5	N/A	Dead End Pin	1
6	N/A	Spacer	2
7	N/A	External Retaining Ring	2
8	N/A	Overload Spring Base	1
9	N/A	Hex Head Bolt, M6	2
10	N/A	Locknut, M6	2
11	23383604	Wire Rope & Swaged End Assembly, 80' Lift Model, 9mm	1
12	N/A	Socket Head Shoulder Bolt, M8 Thread	1
13	N/A	Belleville Spring Washer	4
14	N/A	Hex Head Bolt, M5	1
15	N/A	Plain Hex Nut, M5	1
16	N/A	Limit Switch	1
17	N/A	Socket Head Cap Screw, M5	2
18	N/A	Hi-Collar Lockwasher	2
	33290506C	**"B" Frame Block Operated Limit Switch**	**1**
19	N/A	Limit Switch Bracket	1
20	N/A	Limit Switch	1
21	N/A	Limit Switch Hub	1
22	N/A	Actuator Rod (Actuator Rod May be to Left or Right.)	1
23	N/A	Pan Head Screw, #10	2
24	N/A	Lockwasher, #10	2
25	N/A	Socket Head Cap Screw, #10	2

HOOVER CRANE SERVICE COMPANY

"C" Frame: Wire Rope Dead End Assembly Components for Figure 9-6c. S2 Reeved			
REF. No.	**Part Number**	**Description**	**Qty. Req'd**
	44934701C	**"C" Frame Hoist Rope and Dead End Assembly (Excl. Ref. Nos. 11, 19 - 25)**	**1**
1	N/A	Dead End Yoke	1
2	N/A	Yoke Pin	1
3	N/A	External Retaining Ring	2
4	N/A	Overload Beam	1
5	N/A	Dead End Pin	1
6	N/A	Spacer	2
7	N/A	External Retaining Ring	2
8	N/A	Overload Spring Base	1
9	N/A	Hex Head Bolt, M10	2
10	N/A	Locknut, M10	2
11	23386504	Wire Rope & Swaged End Assembly, 80' Lift Model, 12mm	1
12	N/A	Socket Head Shoulder Bolt, M8 Thread	1
13	N/A	Belleville Spring Washer	6
14	N/A	Hex Head Bolt, M5	1
15	N/A	Plain Hex Nut, M5	1
16	N/A	Limit Switch	1
17	N/A	Socket Head Cap Screw, M5	2
18	N/A	Hi-Collar Lockwasher	2
	33290507C	**"C" Frame Block Operated Limit Switch**	**1**
19	N/A	Limit Switch Bracket	1
20	N/A	Limit Switch	1
21	N/A	Limit Switch Hub	1
22	N/A	Actuator Rod (Actuator Rod May be to Left or Right.)	1
23	N/A	Pan Head Screw, #10	2
24	N/A	Lockwasher, #10	2
25	N/A	Socket Head Cap Screw, #10	2

NOTES

HOOSIER CRANE SERVICE COMPANY

S2 REEVED

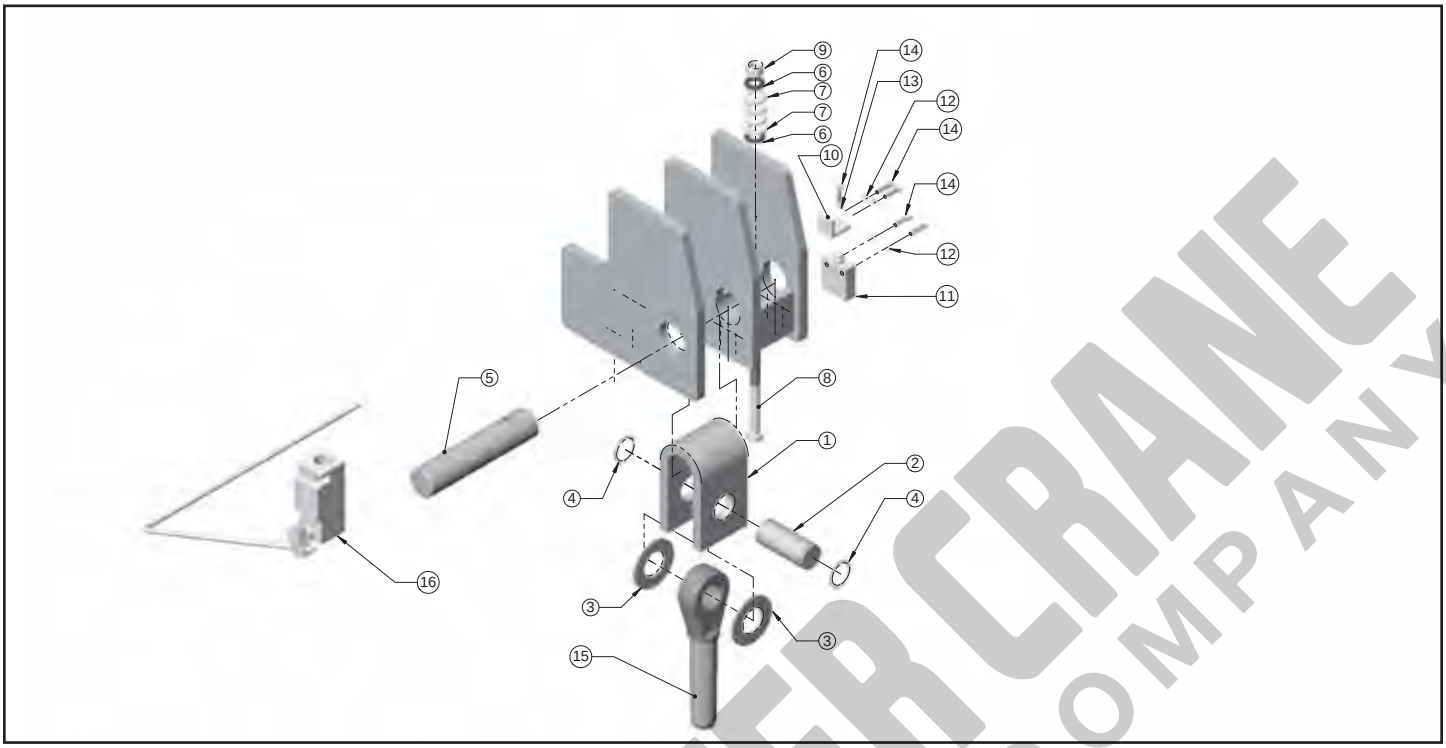

Figure 9-6d. Wire Rope Dead End Assembly with Limit Switch ("D" Frame) (S2 Reeved)

"D" Frame: Wire Rope Dead End Assembly Components for Figure 9-6d. S2 Reeved			
REF. No.	**Part Number**	**Description**	**Qty. Req'd**
	45426901C	Dead End Assembly (Excl. Ref Nos. 15 & 16)	1
1	N/A	Dead End Yoke	1
2	N/A	Dead End Pin	1
3	N/A	Washer Flat	2
4	N/A	External Retaining Ring (Truac 5100-125)	2
5	N/A	Yoke Overload Pin	1
6	N/A	Washer Flat M12 Plated CL4	3
7	N/A	Belleville Spring, HDS12 (Preset)	4
8	N/A	High Strength Bolt, Hex Head 12MM-1.75 X 100MM LG. Class 8.8	1
9	N/A	12Mm-1.75 Esna Self Locking Nut (Plated)	1
10	N/A	Overload Adjustment	1
11	N/A	Limit Switch Miniature Plunger	1
12	N/A	M5, Hi-Collar Lockwasher	4
13	N/A	M5 Hex Nut	1
14	N/A	M5 X 20MM Socket Head Cap Screw	5
15	23393905	Wire Rope & Swaged End Assembly, 80' Lift, 15MM	1
16	33290508C	Block Limit Switch Assembly	1

SHAW-BOX CRANE SERVICE COMPANY

S4 & S2 REEVED

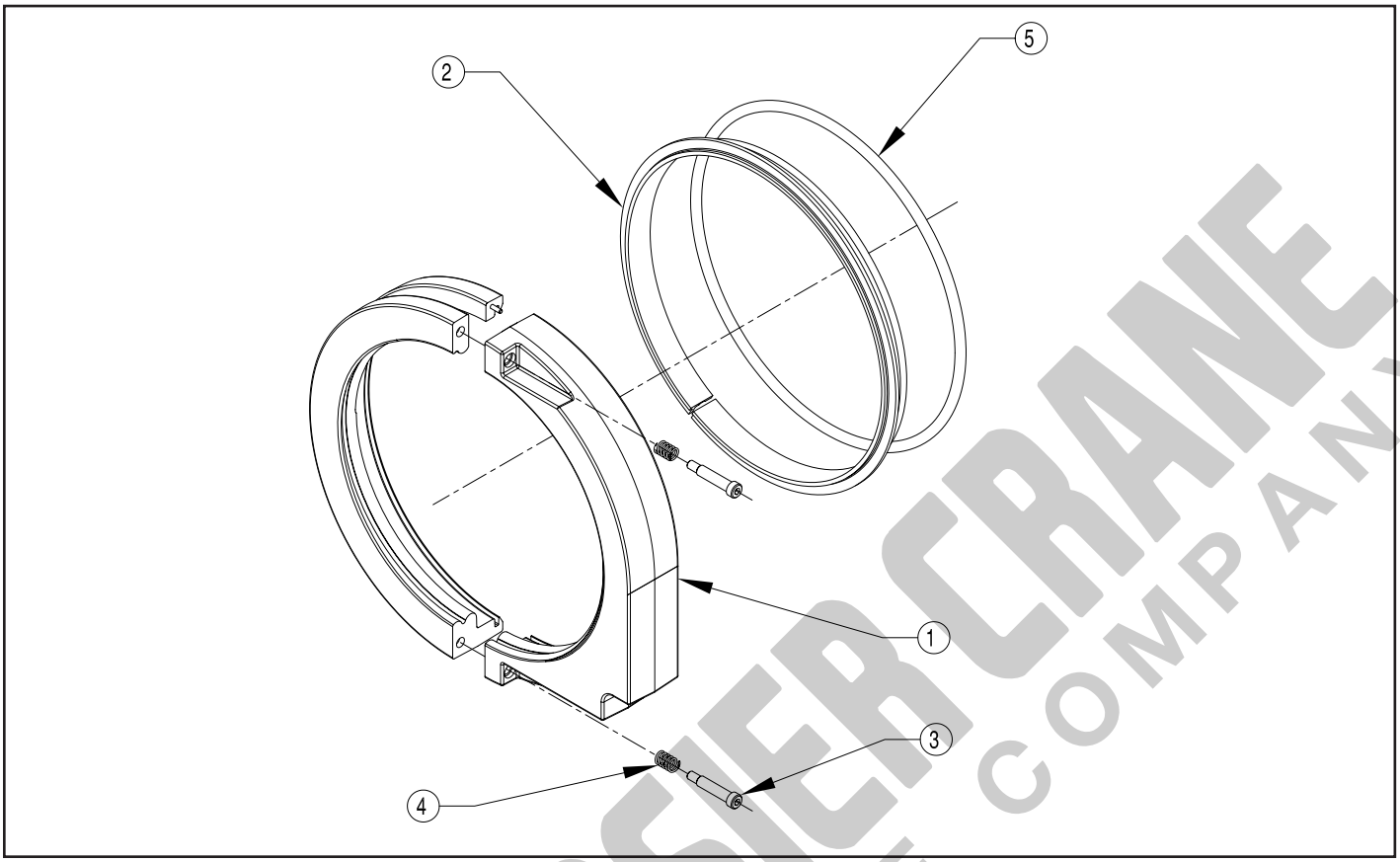

Figure 9-7a. Rope Guide Assembly ("B" & "C" Frame) (S4 & S2 Reeved)

"B" Frame: Rope Guide Components for Figure 9-7a. S4 & S2 Reeved			
REF. No.	**Part Number**	**Description**	**Qty. Req'd**
	44931801C	**"B" Frame Rope Guide Assembly**	**1**
1	N/A	Rope Guide Body	1
2	N/A	Plastic Shroud	1
3	N/A	Socket Head Shoulder Bolt, M6 Thread	2
4	N/A	Compression Spring	2
5	N/A	Extension Spring	1

"C" Frame: Rope Guide Components for Figure 9-7a. S4 & S2 Reeved			
REF. No.	**Part Number**	**Description**	**Qty. Req'd**
	44933801C	**"C" Frame Rope Guide Assembly**	**1**
1	N/A	Rope Guide Body	1
2	N/A	Plastic Shroud	1
3	N/A	Socket Head Shoulder Bolt, M6 Thread	2
4	N/A	Compression Spring	2
5	N/A	Extension Spring	1

LODGER CRANE SERVICE COMPANY

S4 & S2 REEVED

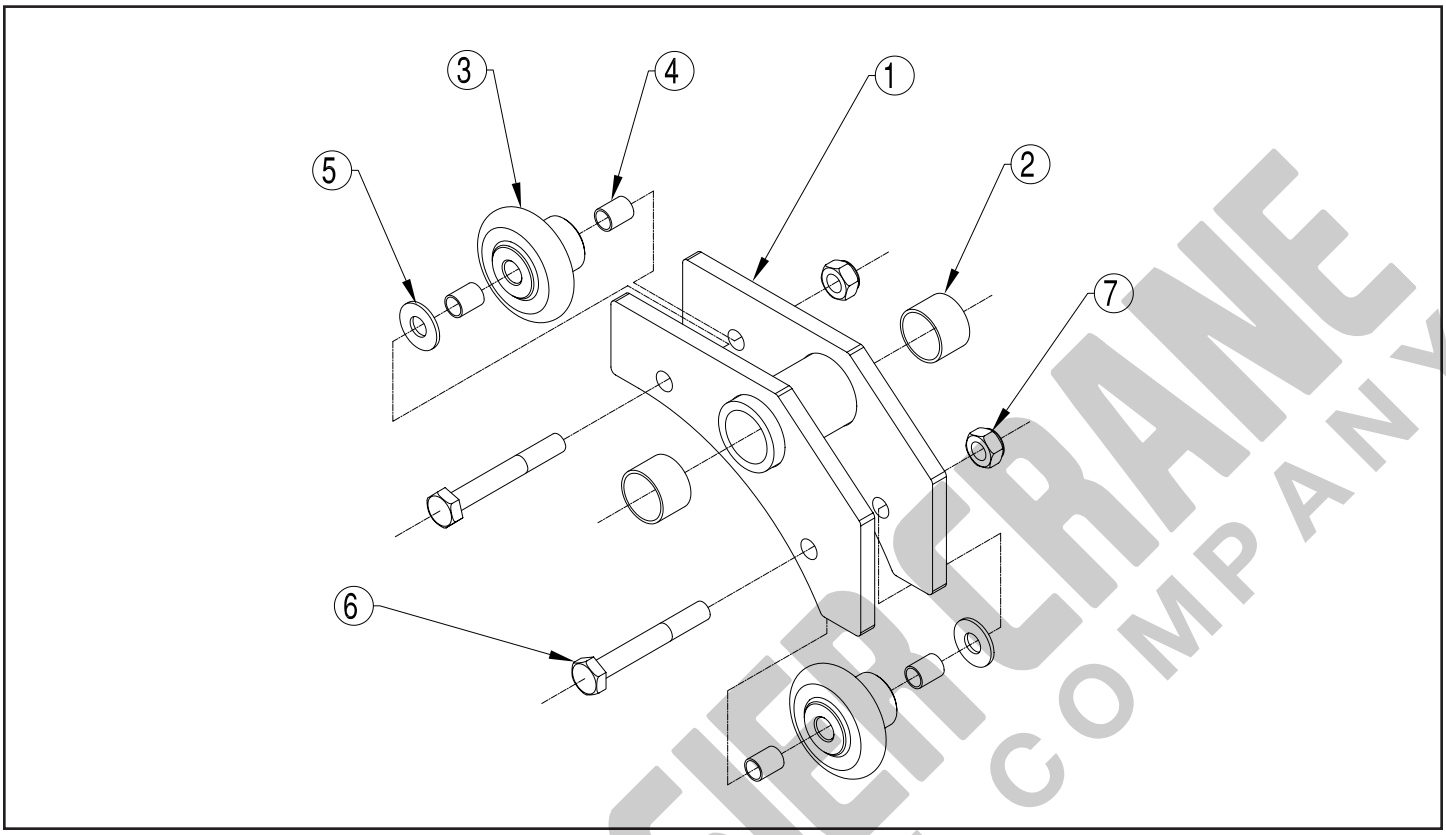

Figure 9-7b. Rope Guide Assembly (S4 & S2 Reeved)

"D" Frame: Rope Guide Components for Figure 9-7b. S4 & S2 Reeved			
REF. No.	**Part Number**	**Description**	**Qty. Req'd**
	33293401C	**"D" Frame Rope Guide Assembly**	**1**
1	N/A	Rope Guide Body	1
2	N/A	Hub Bushing	2
3	N/A	Guide Roller	2
4	N/A	Roller Bushing	4
5	N/A	Washer, 3/8"	2
6	N/A	Hex Head Bolt, M10	2
7	N/A	Locknut, M10	2

MOSER CRANE SERVICE COMPANY

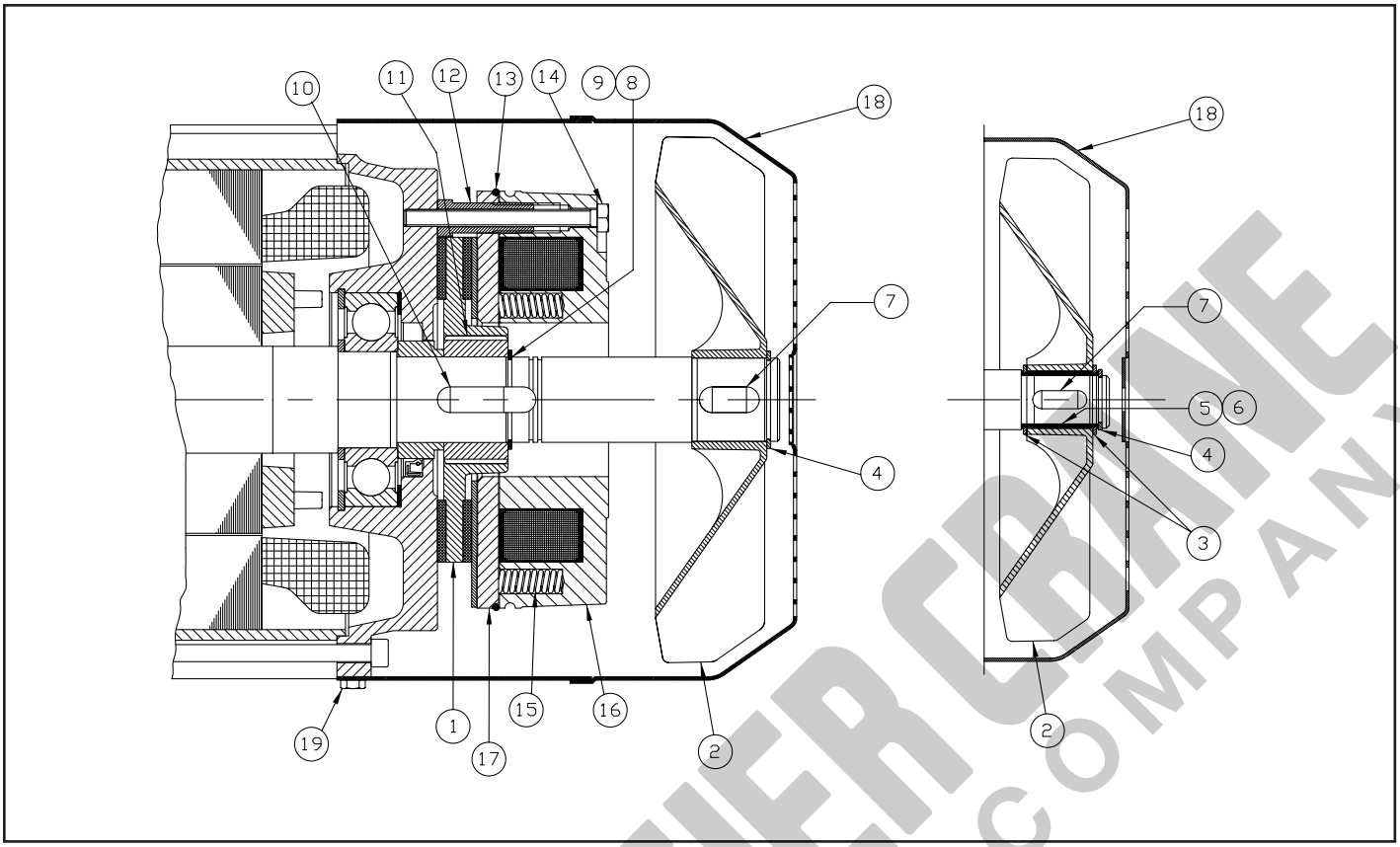

Figure 9-8a. Standard Hoist Motor Brake (ABM Motor)

"B" Frame: Hoist Brake Components for Figure 9-8a. (ABM Motor)			
REF. No.	**Part Number**	**Description**	**Qty. Req'd**
	33313849	Complete Brake Assembly (Includes Ref. Nos. 1,11,16,17 & P/N 33313853)	1
1	33313850	Brake Friction Disc	1
2		Fan	1
3	33313851	External Retaining Rings (Fan Hub)	2
4	BRAKE	External Retaining Ring (Fan)	1
5	FAN	Fan Hub	1
6	KIT	Key (Fan Hub)	1
7		Key (Fan)	1
8	33313852	External Retaining Ring (Brake Hub)	1
9	BRAKE	Spacer (Brake Hub)	1
10	HUB	Key (Brake Hub)	1
11	KIT	Brake Hub	1
12	33313853	Hollow Core Bolts	3
13	HARD-	O-Ring	1
14	WARE	Bolts (Brake Mounting)	3
15	KIT	Compression Springs	7
16	N/A	Magnet Body - Order Complete Brake	1
17	N/A	Armature Plate - Order Complete Brake	1
18	33313855	Fan Shroud	1
19	SHROUD KIT	Bolts (Fan Shroud)	4

HOOSIER CRANE SERVICE COMPANY

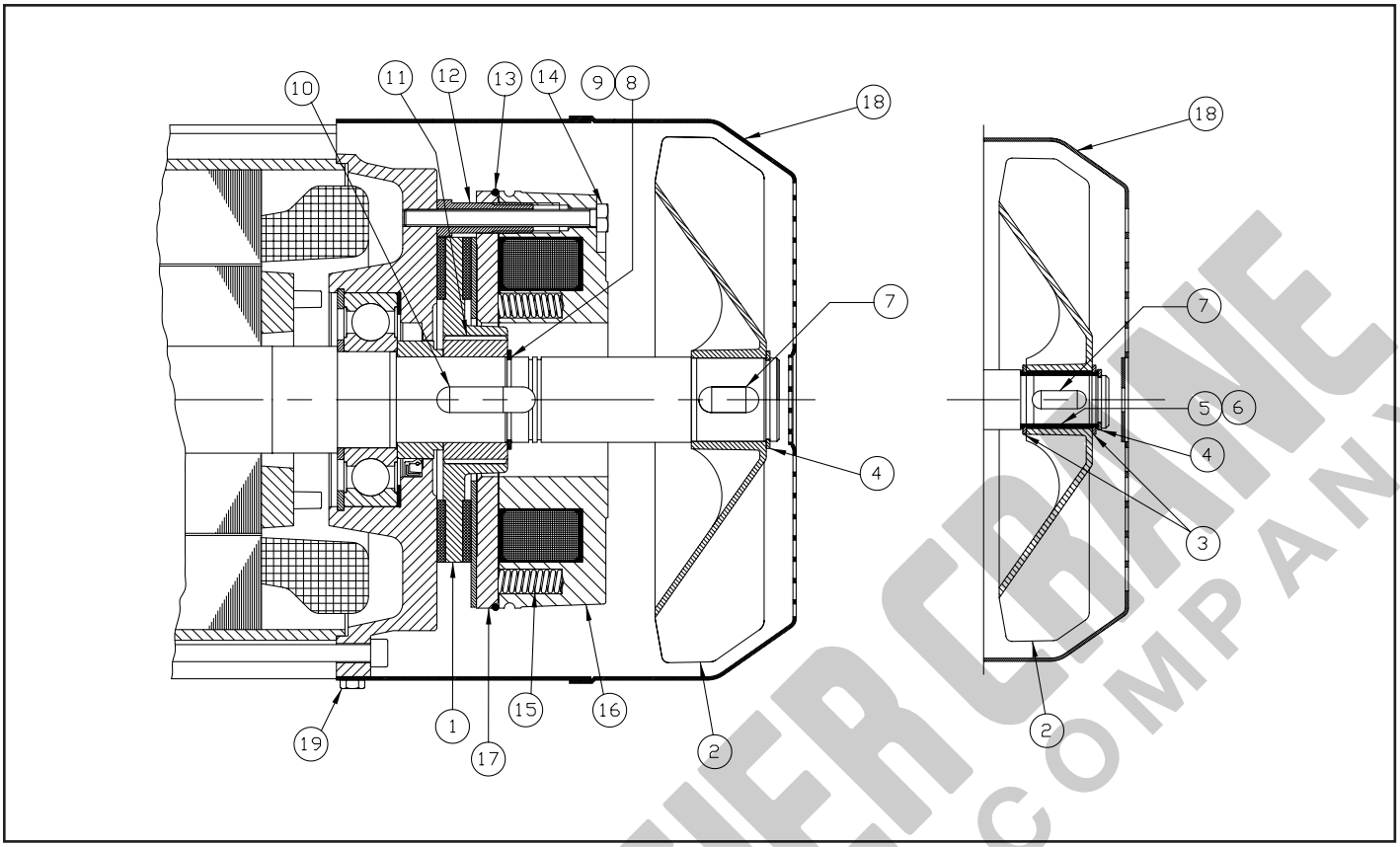

Figure 9-8b. Standard Hoist Motor Brake (ABM Motor)

"C" & "D" Frame: Hoist Brake Components for Figure 9-8c. (ABM Motor)			
REF. No.	**Part Number**	**Description**	**Qty. Req'd**
	33263249	Complete Brake Assembly (Includes Ref. Nos. 1,11,16,17 & P/N 33263253)	1
1	33263250	Brake Friction Disc	1
2		Fan	1
3	33263251	External Retaining Rings (Fan Hub)	2
4	BRAKE	External Retaining Ring (Fan)	1
5	FAN	Fan Hub	1
6	KIT	Key (Fan Hub)	1
7		Key (Fan)	1
8	33263252	External Retaining Ring (Brake Hub)	1
9	BRAKE	Spacer (Brake Hub)	1
10	HUB	Key (Brake Hub)	1
11	KIT	Brake Hub	1
12	33263253	Hollow Core Bolts	3
13	HARD-	O-Ring	1
14	WARE	Bolts (Brake Mounting)	3
15	KIT	Compression Springs	7
16	N/A	Magnet Body - Order Complete Brake	1
17	N/A	Armature Plate - Order Complete Brake	1
18	33263255	Fan Shroud	1
19	SHROUD KIT	Bolts (Fan Shroud)	4

HOOSIER CRANE SERVICE COMPANY

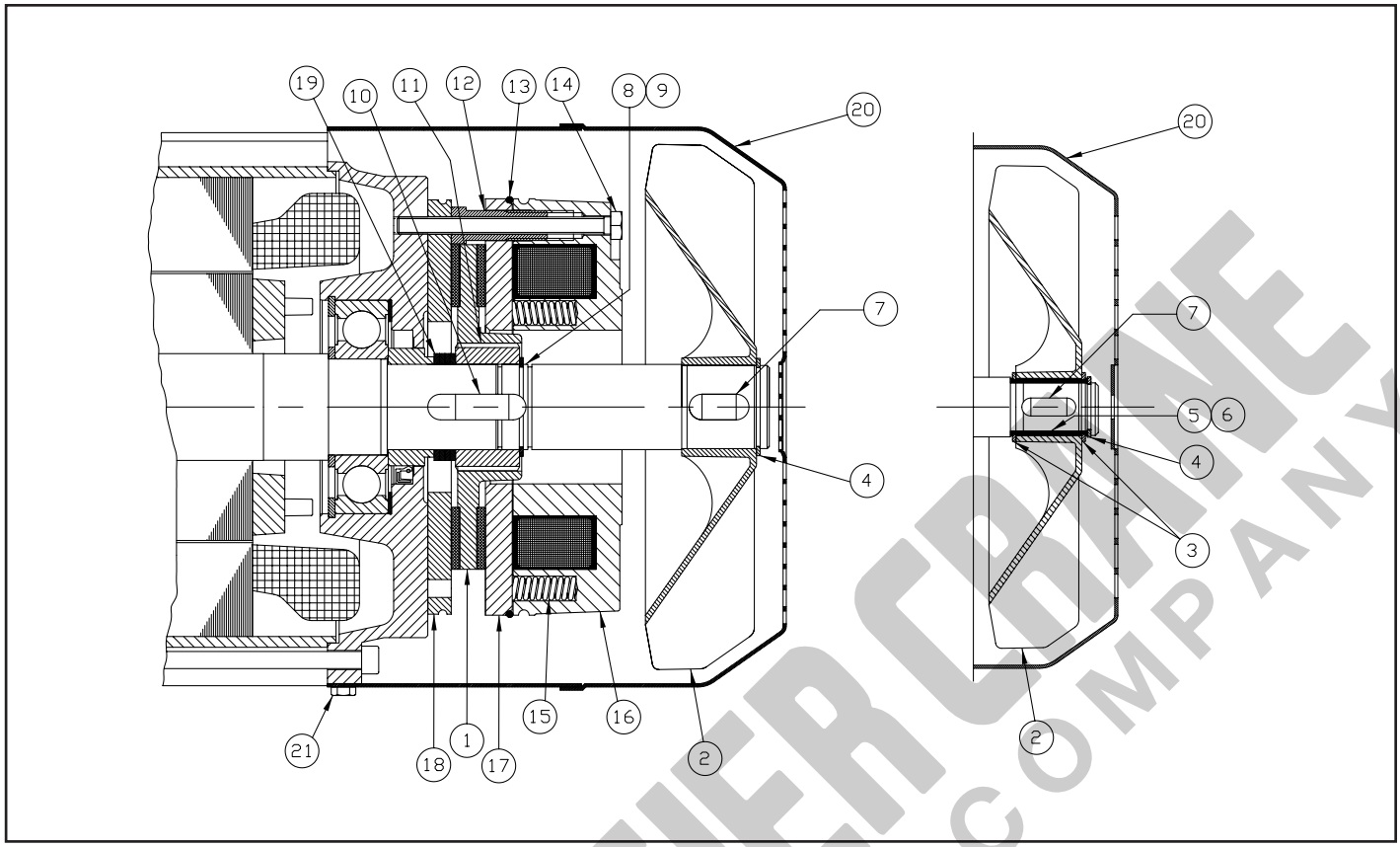

Figure 9-9a. Outdoor Service Hoist Motor Brake (ABM Motor)

"B" Frame: Hoist Brake Components for Figure 9-9a. (ABM Motor)			
REF. No.	**Part Number**	**Description**	**Qty. Req'd**
	33294049	Complete Brake Assembly (Includes Ref. Nos. 1,11,16,17, 18 & P/N 33294053)	1
1	33313850	Brake Friction Disc	1
2		Fan	1
3	33313851	External Retaining Rings (Fan Hub)	2
4	BRAKE	External Retaining Ring (Fan)	1
5	FAN	Fan Hub	1
6	KIT	Key (Fan Hub)	1
7		Key (Fan)	1
8	33294052	External Retaining Ring (Brake Hub)	1
9	BRAKE	Spacer (Brake Hub)	1
10	HUB	Key (Brake Hub)	1
11	KIT	Stainless Steel Brake Hub	1
12	33294053	Hollow Core Bolts	3
13	HARD-	O-Ring	1
14	WARE	Bolts (Brake Mounting)	3
15	KIT	Compression Springs	7
16	N/A	Magnet Body - Order Complete Brake	1
17	N/A	Stainless Steel Armature Plate - Order Complete Brake	1
18	N/A	Stainless Steel Friction Disc - Order Complete Brake	1
19	11803105	Spacer Washers	4
20	33313855	Fan Shroud	1
21	SHROUD KIT	Bolts (Fan Shroud)	4

HOOSIER CRANE SERVICE COMPANY

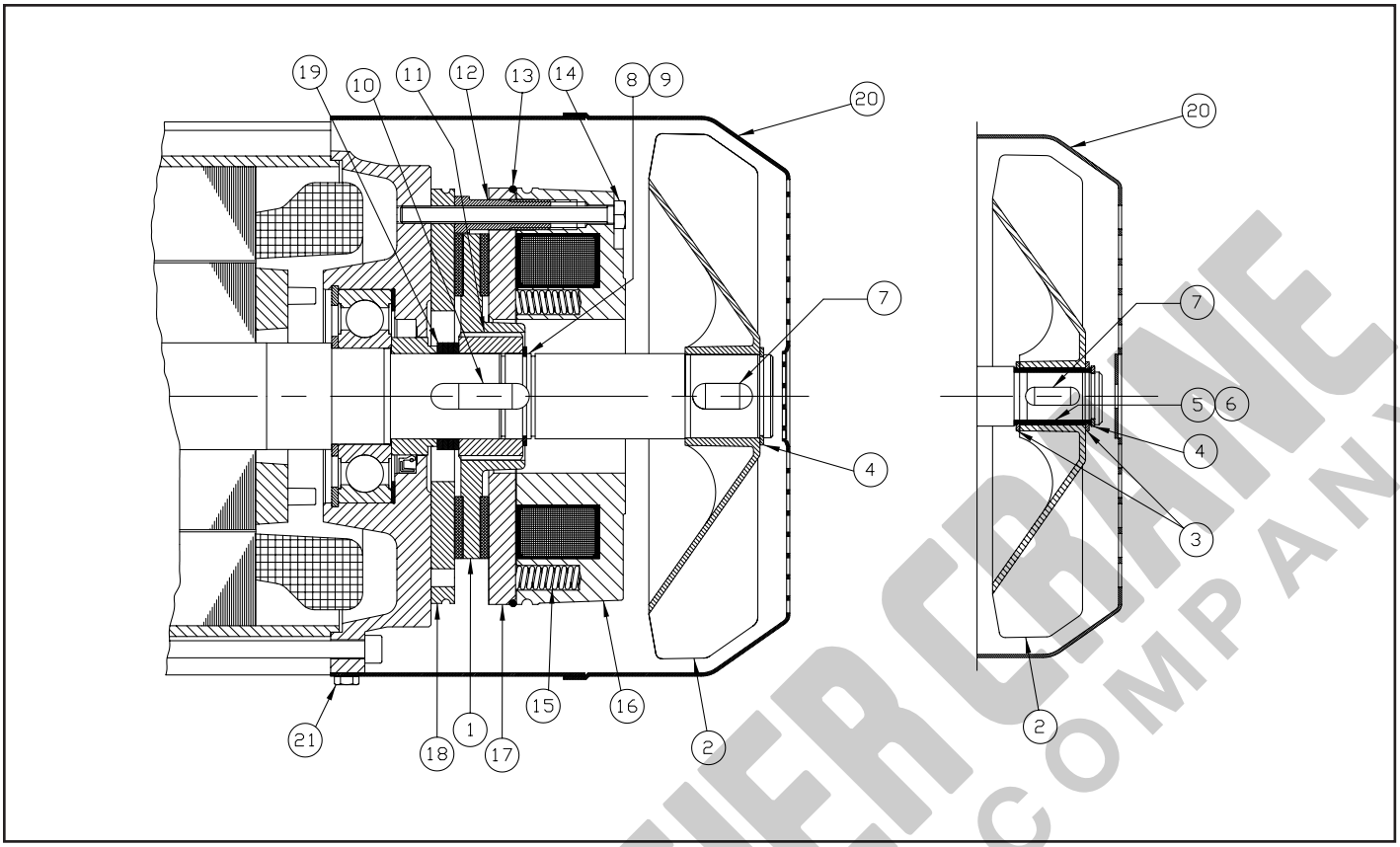

Figure 9-9b. Outdoor Service Hoist Motor Brake (ABM Motor)

"C" & "D" Frame: Hoist Brake Components for Figure 9-9b. (ABM Motor)			
REF. No.	**Part Number**	**Description**	**Qty. Req'd**
	33294149	Complete Brake Assembly (Includes Ref. Nos. 1,11,16,17, 18 & P/N 33294153)	1
1	33263250	Brake Friction Disc	1
2		Fan	1
3	33263251	External Retaining Rings (Fan Hub)	2
4	BRAKE	External Retaining Ring (Fan)	1
5	FAN	Fan Hub	1
6	KIT	Key (Fan Hub)	1
7		Key (Fan)	1
8	33294152	External Retaining Ring (Brake Hub)	1
9	BRAKE	Spacer (Brake Hub)	1
10	HUB	Key (Brake Hub)	1
11	KIT	Stainless Steel Brake Hub	1
12	33294153	Hollow Core Bolts	3
13	HARD-	O-Ring	1
14	WARE	Bolts (Brake Mounting)	3
15	KIT	Compression Springs	7
16	N/A	Magnet Body - Order Complete Brake	1
17	N/A	Stainless Steel Armature Plate - Order Complete Brake	1
18	N/A	Stainless Steel Friction Disc - Order Complete Brake	1
19	11803106	Spacer Washers	4
20	33263255	Fan Shroud	1
21	SHROUD KIT	Bolts (Fan Shroud)	4

HOOSIER CRANE SERVICE COMPANY

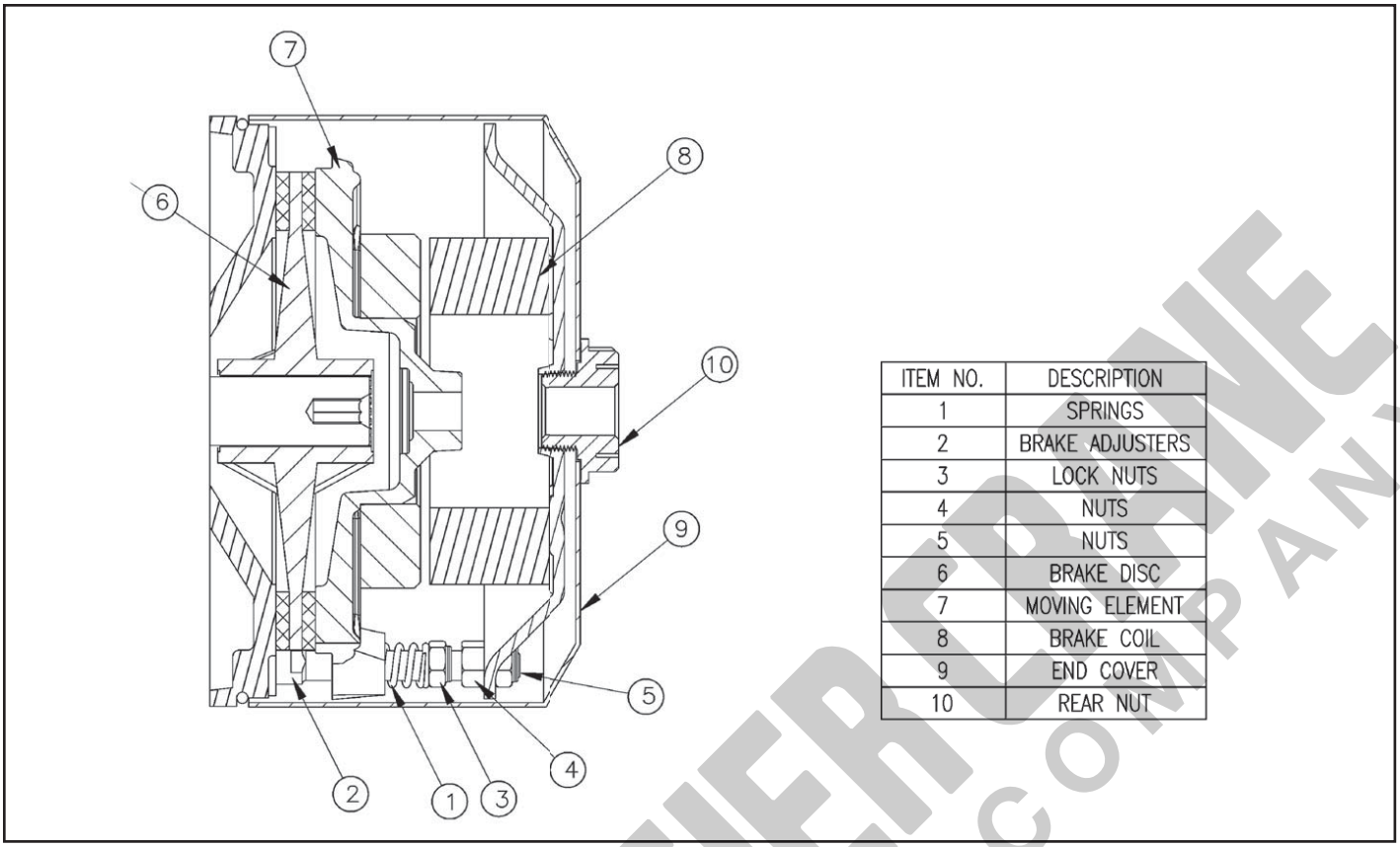

ITEM NO.	DESCRIPTION
1	SPRINGS
2	BRAKE ADJUSTERS
3	LOCK NUTS
4	NUTS
5	NUTS
6	BRAKE DISC
7	MOVING ELEMENT
8	BRAKE COIL
9	END COVER
10	REAR NUT

Figure 9-10a & 9-10b. Standard Hoist Motor Brake (MGM Motor)

"B" Frame: Hoist Brake Components for Figure 9-10a. (MGM Motor)			
REF. No.	**Part Number**	**Description**	**Qty. Req'd**
	33327349	Complete Brake Assembly (Includes Ref Nos. 1-10)	1
	33327350	Brake Adjuster Set (Includes Ref Nos. 1-5)	1
6	33327351	Brake Disc	1
7	33327352	Brake Moving Element	1
8	33327353	24V DC brake Coil	1
9	33327354	Brake Cover	1
10	33327355	Plastic Hexagonal Nut (Standard Brake)	1

"C" & "D" Frame: Hoist Brake Components for Figure 9-10b. (MGM Motor)			
REF. No.	**Part Number**	**Description**	**Qty. Req'd**
	33330749	Complete Brake Assembly (Includes Ref Nos. 1-10)	1
	33330750	Brake Adjuster Set (Includes Ref Nos. 1-5)	1
6	33330751	Brake Disc	1
7	33330752	Brake Moving Element	1
8	33330753	24V DC brake Coil	1
9	33330754	Brake Cover	1
10	33330755	Hexagonal Nut with Seal (IP55 Brake)	1

HOOSIER DRIVE SERVICE COMPANY

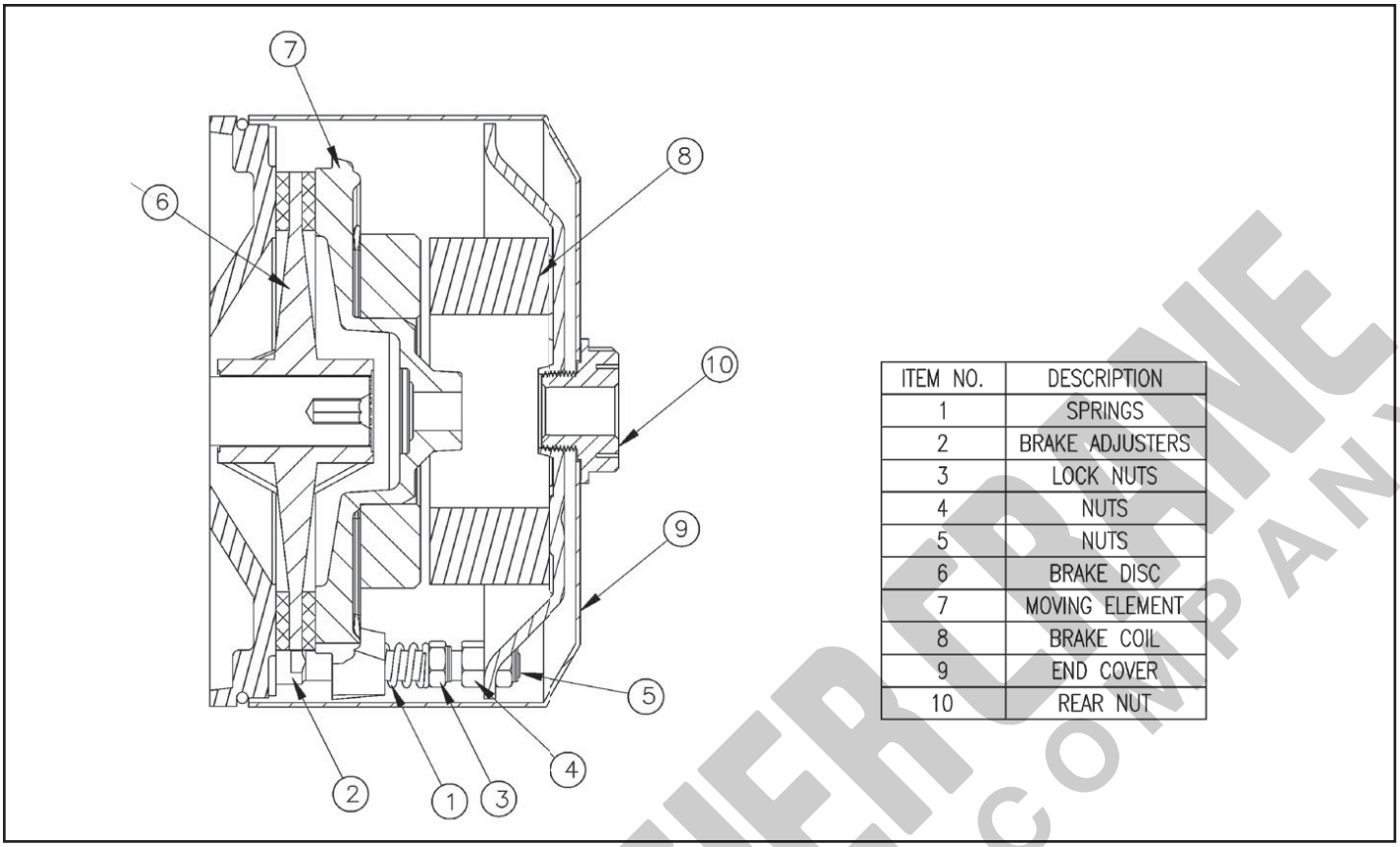

ITEM NO.	DESCRIPTION
1	SPRINGS
2	BRAKE ADJUSTERS
3	LOCK NUTS
4	NUTS
5	NUTS
6	BRAKE DISC
7	MOVING ELEMENT
8	BRAKE COIL
9	END COVER
10	REAR NUT

Figure 9-11a & 9-11b. Outdoor Service Hoist Motor Brake (MGM Motor)

"B" Frame: Hoist Brake Components for Figure 9-11a. (MGM Motor)			
REF. No.	**Part Number**	**Description**	**Qty. Req'd**
	33327359	Complete Brake Assembly (Includes Ref Nos. 1-10)	1
	33327350	Brake Adjuster Set (Includes Ref Nos. 1-5)	1
6	33327351	Brake Disc	1
7	33327352	Brake Moving Element	1
8	33327353	24V DC brake Coil	1
9	33327354	Brake Cover	1
10	33327360	Plastic Hexagonal Nut (Standard Brake)	1

"C" & "D" Frame: Hoist Brake Components for Figure 9-11b. (MGM Motor)			
REF. No.	**Part Number**	**Description**	**Qty. Req'd**
	33330759	Complete Brake Assembly (Includes Ref Nos. 1-10)	1
	33330750	Brake Adjuster Set (Includes Ref Nos. 1-5)	1
6	33330751	Brake Disc	1
7	33330752	Brake Moving Element	1
8	33330753	24V DC brake Coil	1
9	33330754	Brake Cover	1
10	33327360	Hexagonal Nut with Seal (IP55 Brake)	1

HOOSIER DRIVE SERVICE COMPANY

NOTES

HOOSIER CRANE SERVICE COMPANY

RECOMMENDED SPARE PARTS

Certain parts of your hoist will, in time, require replacement under normal wear conditions. It is suggested that the following parts be purchased for your hoist as spares for future use.

One Brake Friction Disc
One Brake Control Module
One Brake Hardware Kit
One Set of Contactors
One Transformer
One Wire Rope Assembly

Note: When ordering parts always furnish Hoist Serial Number, Catalog Number, Motor Horsepower, Voltage, Phase, Frequency and Rated Load of Hoist on which the parts are to be used.

PARTS AND SERVICES ARE AVAILABLE IN THE UNITED STATES AND IN CANADA
Parts for your hoist or trolley are available from your local authorized repair station. For the name of the nearest parts or service center, visit our website www.cmworks.com or call the Columbus McKinnon customer service department at (800) 888-0985.

HOOSIER CRANE SERVICE COMPANY

WARRANTY

LIMITATION OF WARRANTIES, REMEDIES AND DAMAGES

INDEMNIFICATION AND SAFE OPERATION

Buyer shall comply with and require its employees to comply with directions set forth in instructions and manuals furnished by Seller and shall use and require its employees to follow such instructions and manuals and to use reasonable care in the use and maintenance of the goods and any replacement parts. Buyer shall not remove or permit anyone to remove any warning or instruction signs on the goods or replacement parts. In the event of personal injury or damage to property or business arising from the use of the goods or replacement parts, Buyer shall within 48 hours thereafter give Seller written notice of such injury or damage. Buyer shall cooperate with Seller in investigating any such injury or damage and in the defense of any claims arising therefrom.

If Buyer fails to comply with this section or if any injury or damage is caused, in whole or in part, by Buyer's failure to comply with applicable federal or state laws, rules or regulations safety requirements, Buyer shall indemnify and hold Seller harmless against any claims, loss or expense for injury or damage arising from the use of the goods and/or replacement parts.

CMCO Warranty (HOISTS)

A. Columbus McKinnon Corporation ("Seller") warrants to the original end user ("Buyer") that, for a period of one (1) year from the date of Seller's delivery of the goods (collectively, the "Goods") to the carrier, the Goods will be free from defects in workmanship and materials. (b) for a period of three (3) years from the date of Seller's delivery of the Goods to the carrier, the brake discs on the Goods will be free from defects in workmanship and materials; and (c) for the life of the Goods, the mechanical components including, without limitation, the sidewinder hoist lever, of the Goods (other than the brake discs on the Goods) will be free from defects in workmanship and materials. . In addition, Seller warrants to Buyer that, for a period of one (1) year from the date of their delivery by Seller to the carrier, any aftermarket or replacement parts, accessories or components purchased by Buyer with respect to any Goods (collectively, "Replacement Parts") will be free from defects in workmanship and materials.

B. IN THE EVENT OF ANY BREACH OF ANY SUCH WARRANTY, SELLER'S SOLE OBLIGATION SHALL BE EXCLUSIVELY LIMITED TO, AT THE OPTION OF SELLER, REPAIR OR REPLACEMENT, F.O.B. SELLER'S POINT OF SHIPMENT, OF ANY GOODS OR REPLACEMENT PARTS THAT SELLER DETERMINES TO HAVE BEEN DEFECTIVE OR, IF SELLER DETERMINES THAT SUCH REPAIR OR REPLACEMENT IS NOT FEASIBLE, TO A REFUND OF THE PURCHASE PRICE UPON RETURN OF THE GOODS OR REPLACEMENT PARTS TO SELLER. NO CLAIM AGAINST SELLER FOR ANY BREACH OF (i) SUCH WARRANTY WITH RESPECT TO THE ELECTRICAL COMPONENTS OF ANY GOOD OR REPLACEMENT PARTS SHALL BE VALID OR ENFORCEABLE UNLESS BUYER'S WRITTEN NOTICE THEREOF IS RECEIVED BY SELLER WITHIN ONE (1) YEAR FROM THE DATE OF SELLER'S DELIVERY TO THE CARRIER, (ii) SUCH WARRANTY WITH RESPECT TO THE BRAKE DISCS OF ANY GOOD SHALL BE VALID OR ENFORCEABLE UNLESS BUYER'S WRITTEN NOTICE THEREOF IS RECEIVED BY SELLER WITHIN THREE (3) YEARS FROM THE DATE OF SELLER'S DELIVERY TO THE CARRIER AND (iii) SUCH WARRANTY WITH RESPECT TO THE MECHANICAL COMPONENTS, INCLUDING, WITHOUT LIMITATION, THE SIDEWINDER HOIST LEVER, OF ANY GOOD (OTHER THAN THE BRAKE DISCS ON ANY GOOD) SHALL BE VALID OR ENFORCEABLE UNLESS BUYER'S WRITTEN NOTICE THEREOF IS RECEIVED BY SELLER WITHIN ONE (1) YEAR FROM THE DATE ANY ALLEGED CLAIM ACCRUES. EXCEPT FOR THE WARRANTIES SET FORTH ABOVE, SELLER MAKES NO OTHER WARRANTIES WITH RESPECT TO THE GOODS OR ANY REPLACEMENT PARTS, WHETHER EXPRESSED OR IMPLIED, INCLUDING ANY WARRANTIES OF MERCHANTABILITY, FITNESS FOR A PARTICULAR PURPOSE, QUALITY AND/OR THOSE ARISING BY STATUTE OR OTHERWISE BY LAW OR FROM ANY COURSE OF DEALING OR USE OF TRADE, ALL OF WHICH ARE HEREBY EXPRESSLY DISCLAIMED.

C. IN NO EVENT SHALL SELLER BE LIABLE TO BUYER OR ANY THIRD PARTY WITH RESPECT TO ANY GOOD OR REPLACEMENT PART, WHETHER IN CONTRACT, TORT OR OTHER THEORY OF LAW, FOR LOSS OF PROFITS OR LOSS OF USE, OR FOR ANY INCIDENTAL, CONSEQUENTIAL, SPECIAL, DIRECT OR INDIRECT DAMAGES, HOWSOEVER CAUSED. SELLER'S MAXIMUM LIABILITY TO BUYER WITH RESPECT TO THE GOODS OR ANY REPLACEMENT PART SHALL IN NO EVENT EXCEED THE PRICE PAID BY BUYER FOR THE GOODS OR REPLACEMENT PART THAT ARE THE SUBJECT OF THE APPLICABLE CLAIM.

D. Seller shall not be liable for any damage, injury or loss arising out of the use of the Goods or any Replacement Part if, prior to such damage, injury or loss, such Goods or Replacement Parts are: (1) damaged or misused following Seller's delivery to the carrier; (2) not maintained, inspected, or used in compliance with applicable law and Seller's written instructions and recommendations; or (3) installed, repaired, altered or modified (a) with any part or accessory other than those supplied by Seller or (b) without compliance with such laws, instructions or recommendations.

E. This warranty is limited and provided only to the original end user. **Each Good and Replacement Part must be registered within sixty (60) days of receipt of each product to establish eligibility.** Please register at www.cmworks.com/hoist-warranty-registration or submit registration card via US mail.

F. Any action against Seller for breach of warranty, negligence or otherwise in connection with the electrical components of any Good must be commenced by Buyer within one (1) year after: (a) the date any alleged claim accrues; or (b) the date of delivery of the Goods to Buyer, whichever is earlier. Any action against Seller for breach of warranty, negligence or otherwise in connection with the brake discs on any Good must be commenced by Buyer within three (3) years after: (y) the date any alleged claim accrues; or (z) the date of delivery of the Goods to Buyer, whichever is earlier. Any action against Seller for breach of warranty, negligence or otherwise in connection with the mechanical components of any Good (other than the brake discs on any Good) must be commenced by Buyer within one (1) year after the date any alleged claim accrues. Any action against Seller for breach of warranty, negligence or otherwise in connection with any Replacement Part must be commenced by Buyer within one (1) year after: (y) the date any alleged claim accrues; or (z) the date of delivery of the Replacement Part to Buyer, whichever is earlier.

G. This warranty is contingent upon Buyer's proper maintenance and care of the Goods and/or Replacement Part, and does not extend to normal wear and tear. Seller reserves the right, at its option, to void this warranty in the event of Buyer's use with the Goods and/or Replacement Parts of parts or accessories other than those supplied by Seller.

⚠ WARNING

Alterations or modifications of equipment and use of non-Seller replacement parts can lead to dangerous operation and injury.

TO AVOID INJURY:

- Do not alter or modify equipment.
- Do use only replacement parts manufactured by seller.

MOST RECENT REVISION

HOOSIER CRANE SERVICE COMPANY

COLUMBUS McKINNON CORPORATION

FAMILY OF BRANDS

CM · ABELL-HOWE · BUDGIT Hoists · CHESTER HOIST · COFFING HOISTS · UNIFIED · Yale HOISTS · SHAW-BOX · MAGNETEK

USA: Ph: (800) 888.0985 • (716) 689.5400 • Fax: (716) 689.5644 • www.cmworks.com
CANADA: Ph: (877) 264.6478 • Fax: (877) 264.6477 • www.cmworks.com
UK: Ph: +44 1244 375375 • Fax: +44 1244 377403 • www.cmco.eu

© 2018 Columbus McKinnon Corporation. All Rights Reserved.

P/N: 11353399 REV. AC October 2018