Operating, Maintenance & Parts Manual

POWERSTAR™

Electric Chain

Rated Loads

2 through 15-Tons
2000 through 15000 kg.

Follow all instructions and warnings for inspecting, maintaining and operating this hoist.

The use of any hoist presents some risk of personal injury or property damage. That risk is greatly increased if proper instructions and warnings are not followed. Before using this hoist, each operator should become thoroughly familiar with all warnings, instructions, and recommendations in this manual. **Retain this manual for future reference and use.**

Forward this manual to the hoist operator.
Failure to operate the equipment as directed in the manual may cause injury.

HOOSIER CRANE SERVICE COMPANY

Before using the hoist, fill in the information below. Refer to the hoist identification plate.

Model Number _____

Serial Number _____

Purchase Date _____

Voltage _____

Rated Load _____

CM®

PARTS FOR YOUR HOIST ARE AVAILABLE FROM YOUR LOCAL AUTHORIZED REPAIR STATION. FOR THE NAME OF THE NEAREST PARTS OR SERVICE CENTER, VISIT OUR WEBSITE (WWW.CMWORKS.COM) OR CALL OUR CUSTOMER SERVICE DEPARTMENT.

HOOSIER CRANE SERVICE COMPANY

SAFETY PRECAUTIONS

Each Powerstar Electric Hoist is built in accordance with the specifications contained herein and at the time of manufacture complied with our interpretation of applicable sections of the *American Society of Mechanical Engineers Code B30.16 "Overhead Hoists," the National Electrical Code (ANSI/NFPA 70) and the Occupational Safety and Health Act. Since OSHA states the National Electrical Code applies to all electric hoists, installers are required to provide current overload protection and grounding [on the branch circuit section] in keeping with the code. Check each installation for compliance with the application, operation and maintenance sections of these articles.

The safety laws for elevators, lifting of people and for dumbwaiters specify construction details that are not incorporated into the hoists. For such applications, refer to the requirements of applicable state and local codes, and the American National Safety Code for elevators, dumbwaiters, escalators and moving walks (ASME A17.1). Columbus McKinnon Corporation cannot be responsible for applications other than those for which CM equipment is intended.

***Copies of this standard can be obtained from ASME Order Department, 22 Law Drive, Box 2300, Fairfield, NJ 07007-2300, U.S.A.**

THIS SYMBOL POINTS OUT IMPORTANT SAFETY INSTRUCTIONS WHICH IF NOT FOLLOWED COULD ENDANGER THE PERSONAL SAFETY AND/OR PROPERTY OF YOURSELF AND OTHERS. READ AND FOLLOW ALL INSTRUCTIONS IN THIS MANUAL AND ANY PROVIDED WITH THE EQUIPMENT BEFORE ATTEMPTING TO OPERATE YOUR POWERSTAR HOIST.

WARNING

Improper operation of a hoist can create a potentially hazardous situation which, if not avoided, could result in death or serious injury. To avoid such a potentially hazardous situation, the operator shall:

1. **NOT** operate a damaged, malfunctioning or unusually performing hoist.
2. **NOT** operate the hoist until you have thoroughly read and understood this Operating, Maintenance and Parts Manual.
3. **NOT** operate a hoist which has been modified (without the manufacturer's approval or without certification that it is in conformity with ANSI/AMSE B30 volumes).
4. **NOT** lift more than rated load for the hoist.
5. **NOT** use hoist with twisted, kinked, damaged, or worn load chain.
6. **NOT** use the hoist to lift, support, or transport people.
7. **NOT** lift loads over people.
8. **NOT** operate a hoist unless all persons are and remain clear of the supported load.
9. **NOT** operate unless load is centered under hoist.
10. **NOT** attempt to lengthen the load chain or repair damaged load chain.
11. Protect the hoist's load chain from weld splatter or other damaging contaminants.
12. **NOT** operate hoist when it is restricted from forming a straight line from hook to hook in the direction of loading.
13. **NOT** use load chain as a sling, or wrap load chain around load.
14. **NOT** apply the load to the tip of the hook or to the hook latch.
15. **NOT** apply the load unless load chain is properly seated in the chain wheel(s) or sprocket(s).
16. **NOT** apply load if bearing prevents equal loading on all load supporting chains.
17. **NOT** operate beyond the limits of the load chain travel.
18. **NOT** leave load supported by the hoist unattended unless specific precautions have been taken.
19. **NOT** allow the load chain or hook to be used as an electrical or welding ground.
20. **NOT** allow the load chain or hook to be touched by a live welding electrode.
21. **NOT** remove or obscure the warnings on the hoist.
22. **NOT** operate a hoist on which the safety placards or decals are missing or illegible.
23. **NOT** operate a hoist unless it has been securely attached to a suitable support.
24. **NOT** operate a hoist unless load slings or other approved single attachments are properly sized and seated in the hook saddle.
25. Take up slack carefully - make sure load is balanced and load holding action is secure before continuing.
26. Shut down a hoist that malfunctions or performs unusually and report such malfunction.
27. Make sure hoist limit switches function properly.
28. Warn personnel of an approaching load.

CAUTION

Improper operation of a hoist can create a potentially hazardous situation which, if not avoided, could result in minor or moderate injury. To avoid such a potentially hazardous situation, the operator shall:

1. Maintain a firm footing or be otherwise secured when operating the hoist.
2. Check brake function by tensioning the hoist prior to each lift operation.
3. Use hook latches. Latches are to retain slings, chains, etc. under slack conditions only.
4. Make sure the hook latches are closed and not supporting any parts of the load.
5. Make sure the load is free to move and will clear all obstructions.
6. Avoid swinging the load or hook.
7. Make sure hook travel is in the same direction as shown on the controls.
8. Inspect the hoist regularly, replace damaged or worn parts, and keep appropriate records of maintenance.
9. Use the hoist manufacturer's recommended parts when repairing the unit.
10. Lubricate load chain per hoist manufacturer's recommendations.
11. **NOT** use the hoist load limiting or warning device to measure load.
12. **NOT** use limit switches as routine operating stops unless allowed by manufacturer. They are emergency devices only.
13. **NOT** allow your attention to be diverted from operating the hoist.
14. **NOT** allow the hoist to be subjected to sharp contact with other hoists, structures, or objects through misuse.
15. **NOT** adjust or repair the hoist unless qualified to perform such adjustments or repairs.

HOOSIER CRANE SERVICE COMPANY

HOIST SAFETY IS UP TO YOU...

WARNING – DO NOT LIFT MORE THAN RATED LOAD.

1 CHOOSE THE RIGHT HOIST FOR THE JOB...

Choose a hoist with a capacity for the job. Know the capacities of your hoists and the weight of your loads. Then match them.

The application, the size and type of load, the attachments to be used and the period of use must also be taken into consideration in selecting the right hoist for the job.

Remember the hoist was designed to ease our burden and carelessness not only endangers the operator, but in many cases, a valuable load.

WARNING
- DO NOT OPERATE DAMAGED OR MALFUNCTIONING HOIST.
- DO NOT OPERATE WITH TWISTED, KINKED OR DAMAGED CHAIN.

2 INSPECT

All hoists should be visually inspected before use, in addition to regular, periodic maintenance inspections.

Inspect hoists for operational warning notices and legibility.

Deficiencies should be noted and brought to the attention of supervisors. Be sure defective hoists are tagged and taken out of service until repairs are made.

Under no circumstances should you operate a malfunctioning hoist.

Check chain for gouged, twisted, distorted links and foreign material. Do not operate hoists with twisted, kinked or damaged chain.

Load chain should be properly lubricated.

Hooks that are bent, worn or whose openings are enlarged beyond normal throat opening should not be used. If latch does not engage throat opening of hook, hoist should be taken out service.

Check for misphasing – hook travel should correspond to control direction.

WARNING – DO NOT PULL AT AN ANGLE. BE SURE HOIST AND LOAD ARE IN A STRAIGHT LINE.

3 USE HOIST PROPERLY

Be sure hoist is solidly held in the uppermost part of the support hook arc.

Be sure hoist and load are in a straight line. Do not pull at an angle.

Be sure load is hooked securely. Do not tip load the hook. Do not load hook latch. Hook latch is to prevent detachment of load under slack chain conditions only.

Do not use load chain as a sling. Such usage damages the chain and lower hook.

Do not operate with hoist head resting against any object. Lift the load gently. Do not jerk it.

WARNING – DO NOT LIFT PEOPLE OR LOADS OVER PEOPLE.

4 LIFT PROPERLY

Do not lift co-workers with a hoist.

Make sure everyone is clear of the load when you lift.

Do not remove or obscure operational warning notices.

5 MAINTAIN PROPERLY

CLEANING: Hoists should be kept clean and free of dust, dirt, moisture, etc., which will in any way affect the operation or safety of the equipment.

LUBRICATION: Chain should be properly lubricated.

AFTER REPAIRS: Carefully operate the hoist before returning it to full service.

VIOLATION OF ANY OF THESE WARNINGS LISTED MAY RESULT IN SERIOUS PERSONAL INJURY TO THE OPERATOR OR NEARBY PERSONNEL BY RELEASED LOAD OR BROKEN HOIST COMPONENTS.

HOOSIER CRANE SERVICE COMPANY

FOREWORD

This manual contains important information to help you properly install, operate and maintain your hoist for maximum performance, economy and safety.

Please study its contents thoroughly before putting your hoist into operation. By practicing correct operating procedures and by carrying out the recommended preventive maintenance suggestions, you will experience long, dependable and safe service.

After you have completely familiarized yourself with the contents of this manual, we recommend that you carefully file it for future reference.

The information herein is directed to the proper use, care and maintenance of the hoist and does not comprise a handbook on the broad subject of rigging. Rigging can be defined as the process of lifting and moving heavy loads using hoists and other information, we recommended consulting a standard textbook on the subject.

TABLE OF CONTENTS

SAFETY PRECAUTIONS PAGE
- Master Parts Depots i
- Safety Precautions ii
- Hoist Safety is Up To You iii
- Foreward 1
- Table of Contents 1
- Operating and Safety Procedures 2
- Inspection 2
- Preventative Maintenance 2

GENERAL INFORMATION
- Specifications 4
- CM Repair/Replacement Policy 4
- Accessories 5
- Installation 5
- Operation 8

MAINTENANCE AND CARE
- Load Chain Cleaning and Inspection 9
- Hooks 10
- Hoist Electric Brake 10
- Lubrication 11
- Adjustments 11-13
- Electrical Data 13-15
- Testing 15
- Wiring Diagrams 15-16

TROUBLE SHOOTING
- All Hoists 17-19

DISASSEMBLY AND ASSEMBLY INSTRUCTIONS
- Removal and Installation of Load Chain 20
- Replacing Motor 21
- Replacing Liftwheel and/or Chain Guides 21

PARTS LIST
- Ordering Instructions 22
- Parts List and Exploded View 23-50

LIST OF TABLES

PAGE

1 Minimum Frequent Inspections 3
2 Minimum Periodic Inspections 3
3a Trolley Spacer Washer Arrangement (1/2 thru 6 Ton) . . . 5
3b Trolley Spacer Washer Arrangement (7 1/2 thru 15 Ton) . . 6
4 Hoist Support Plate Dimensions 7
5 Minimum Operating Voltages 7
6 Protector Slip point 12
7a. Hook Travel per Notch of Limit Switch Nut (1/2 thru 6 Ton) 13
7b Hook Travel per Notch of Limit Switch Nut (7 1/2 thru 15 Ton) 13
8 Electrical Resistance Data 13
9 Parts List 23-34

LIST OF ILLUSTRATIONS

1 Powerstar Electric Chain Hoist 4
2 Chain Container Installation 8
2.1 Support Chain Attachment 9
3 Gaging Load Chain Wear 10
4 Cutting Chain by Nicking 10
5 Hook Inspection 10
6 Brake Air Gap-Typical at 3 Brake Studs 11
7 Cutout Switch Actuator Screw Adjustment 12
8 Adjustable Screw Limit Switch 12
9 Wiring Diagram -Single Speed Hoist 15
10 Wiring Diagram-Single Speed Hoist w/Motor Driven Trolley 16
11 Wiring Diagram-Two Speed Hoist 16
12 Wiring Diagram-Two Speed Hoist w/Motor Driven Trolley 16
13 Parts Illustrations Key 22
14 Single Speed Control Station 35
15 Two Speed Control Station 36
16 Hoist & Trolley Control Station 37
17 Control Station & Separate MDT Control Components . . 38
18 Chain Container (2-6 Ton Capacity) 45
19 Lug Suspension Parts 45
20 Parts List Drawing (7½, 9 & 10 Ton Hoist & Trolley) 47
21 Parts List Drawing (7½, 9 & 10 Ton Hoist & Trolley) 48
22 Parts List Drawing (10 & 12 Ton Hoist & Trolley) 49
23 Parts List Drawing (10 & 12 Ton Hoist & Trolley) 50

HOOSIER CRANE SERVICE COMPANY

OPERATING AND SAFETY PROCEDURES

Operating the Hoist

1. Before picking up a load, check to see that the hoist is directly overhead.

IMPORTANT: ***When applying a load, it should be directly under hoist or trolley. Avoid off center loading of any kind.***

2 Take up a slack load chain carefully and start load easily to avoid shock and jerking of hoist load chain. If there is any evidence of overloading, immediately lower the load and remove the excess load.

3. Do not allow the load to swing or twist while lifting.

Hoist with Plain Trolley

This unit should be moved by pushing on the suspended load or pulling on the empty hook. The pendant chain supporting control station should not be used for this purpose.

Hoist with Geared Trolley

This unit should be moved by means of the trolley hand chain. Pull on the chain farthest from end toward which the unit is to travel.

Hoist with Motor Driven Trolley

This unit should be moved by operating the controls marked ← FORWARD and ➔ REVERSE in control station. Anticipate the stopping point and allow trolley to coast to a smooth stop. Reversing or "plugging" to stop trolley causes overheating of motor and swaying of load.

Safety

1. When preparing to lift a load, be sure that the attachment to the hook are firmly seated in hook saddle. Avoid off center loading of nay kind, especially loading on the tip of the hook.
2. When lifting, raise the load only enough to clear the floor or support and check to be sure that the attachments to hook and load are firmly seated. Continue lift only after you are assured the load is free of all obstructions.
3. Do not load hoist beyond the rated capacity shown on hoist identification plate. Overloading can cause immediate failure of some load carryiny part or create a defect causing sub-sequent failure at less than rated capacity. When in doubt, use the next larger capacity CM® Powerstar Hoist.
4. Do not use this or any other overhead material handling equipment for lifting people.
5. Stand clear of all loads and do not move or locate a load over the heads of other people. Warn people of your intention to move a load in their area.
6. Don not leave the load suspended in the air unattended.
7. Let only qualified people operate unit.
8. Do not wrap the load chain around the load and hook onto itself as a choker chain.
   Doing this will result in the following:
   a. The upper limit is not effective and the load could hit the hoist.
   b. The swivel effect of the hook could be lost and result in a twisted chain and a jammed liftwheel.
   c. The chain could be damaged at the hook.

INSPECTION

To maintain continuous and satisfactory operation, a regulat inspection procedure must be initiated to replace worn or damaged parts before they become unsafe. Inspection intervals must be determined by the individual application and ate based on the type of service to which your hoist will be subjected and the degree of exposure to wear, deterioration or malfunction of the critical components.

The type of service to which the hoist is subjected can be classified as "Normal", "Heavy" and "Severe".

Normal Service: Involves operation with randomly distributed loads within the rated load limit, or uniform loads less than 65 percent of rated load for not more than 25 percent of the time.

Heavy Service: Involves operating the hoist within the rated load limit which exceeds normal service.

Severe Service: Is normal or heavy service with abnormal operating conditions.

Two classes of inspection-frequent and periodic-must be performed.

Frequent Inspections: These inspections are visual examinations by the operator or other designated personnel. Records if such inspection are not required. The frequent inspections are to be performed monthly for normal service, weekly to monthly for heavy service, and daily to weekly for severe service and they should include those items listed in Table 1.

Periodic Inspections: These inspections are visual inspections of external conditions by an appointed person. Records of periodic inspections are to be kept for continuing evalation of the condition of the hoist. Periodic inspections are to be performed yearly for normal service, semi-annually for heavy service and quarterly for severe service and they are to include those items listed in Table 2.

WARNING: ***Any deficiencies are to be corrected before the hoist is returned to service. Also, the external conditions may show the need for dis-assembly to permit a more detailed inspection which, in turn may require the use of non-destructive type testing.***

PREVENTIVE MAINTENANCE

In addition to the above inspection procedure, a preventive maintenance program should be established to prolong the useful life of the hoist and maintain its reliability and continued safe use. The program should include the following periodic and frequent inspections with particular attention being paid to the lubrication of the various components using the recommended lubricants (see page 9).

HOUSER CRANE SERVICE COMPANY

Table 1

Minimum Frequent Inspections

Type of Service			Item
Normal	Heavy	Severe	
Yearly	Weekly to Yearly	Daily to Weekly	a) Brake for evidence of slippage. b) Control functions for proper operation. c) Limit switches for proper operation-see page 8. d) Hooks for damage, cracks, twists, excessive throat opening, latch engagement and latch operation-see page 10. e) Load chain for lubricant, wear, damaged links or foreign matter-see page 9..

Table 2

Minimum Periodic Inspections

Type of Service			Item
Normal	Heavy	Severe	
Yearly	Every Six Months	Every Three Months	a) Frequent inspections per Table 1. b) External evidence of loose screws, bolts or nuts. c) External external evidence of worn, corroded, cracked or distorted hook block, suspension bolts, gears, pins, bearings, hand chain wheel, levers and frames. d) External evidence of damage or excessive wear to the hook collar and retaining pin. e) Trolley wheels for external wear on the tread and flange, and for wear on the internal bearing surfaces as evidenced by looseness on the stud. f) External evidence of excessive wear of the electric brake-see page 10. g) Contactors and relays for signs of pitting or any deterioration of the visible contacts. h) Inspect the electrical cords and cables for damaged insulation. i) Oil level in gear housing - see page 7. j) Liftwheel pockets for wear as evidenced by a widening and deep-ending of the load end of pocket. This will cause the chain to lift up in pocket and result in binding bewteen liftwheel and chain guides. Severely worn liftwheel should be replaced. k) Chain guides for wear or burring where chain enters hoist. Severely worn guides should be replaced. l) Load chain, chain guides and liftwheel pockets for clogging with foreign matter which causes the chain to bind. Clean parts with solvent and wipe chain down with Lubriplate, Bar and Chain Oil 10-R (Friske Bros. Refining Co.) or equal lubricant. m) Collector shoes for wear. Badly worn parts should be replaced. n) Gasket between gear cover and main frame for signs of leaks. Tighten the screws holding gear cover to main frame. If leakage persists, install a new gasket. o) Supporting structure and trolley, if used, for external evidence of damage. p) Warning label or tag and hoist identification plate for existence and legibilty. q) Gear cover breather vent for free passage of air. Clean if necessary. r) Fans* for proper operation by placing a temporary jumper across thermostat terminal S1 and S2. Replace the fans if they fail to operate. s) Fan* control thermostat by manipulating the thermostat setting. After completing check, reset thermostat at 130° F.

*Applies to hoists with 7.5/2.5 horsepower, 2 speed motors.

CAUTION: The outboard bearings supporting the intermediate gears are located in gear housing cover. Therefore, it should be carefully removed. It is suggested, in order to retain the gears in gear housing, that the hoist be tipped slightly upward or positioned on end, then carefully lift cover.

HOOSIER CRANE SERVICE COMPANY

GENERAL INFORMATION

SPECIFICATIONS

The Powerstar Electric Chain Hoist (Figure 1) is a highly versatile materials handling device that can be used to lift loads that are within rated capacity. It is available in capacities of 2, 3, 4, 5, 6, 7½, 9, 10 12 and 15 Tons with close headroom type construction. A wide variety of lifting speeds and lift ranges are available as well as single and two-speed operation. The hoist can be supplied with lug suspension, plain trolley, geared trolley or motor driven trolley.

The mechanical features of these hoist include a rugged aluminum alloy frame, CM Hoistaloy® load chain, 3 gear reduction helical gearing system, alloy steel liftwheel, ductile iron chain guide, forged steel latch type hook on 7½ through 15 Ton units, overload device (Protector) and a chain container.

The electrical features include D.C. rectified, triple disc hoist brake, magnetic reversing contactors, isolating transformer, adjustable upper and lower limit switches, heavy duty thermally protected hoist and trolley motors and a rugged push-button station.

CM REPAIR/REPLACEMENT POLICY

All Columbus McKinnon (CM) Powerstar Electric Chain Hoists are inspected and performance tested prior to shipment. If any properly maintained hoist develops a performance problem, within 1 (one) year of shipment, due to a material or workmanship defect, as verified by CM, repair or replacement of the unit will be made to the original purchaser without charge. This repair/replacement policy applies only to Powerstar Hoists installed, maintained and operated as outlined in this manual, and specifically excludes parts subject to normal wear, abuse, improper installation, improper or inadequate maintenance, hostile environmental effects and unauthorized repairs/modifications.

We reserve the right to change materials or design if, in our opinion, such changes will improve our product. Abuse, repair by an unauthorized person, or use of non-CM replacement parts voids the guarantee and could lead to dangerous operation. For full Terms of Sale, see Sales Order Acknowledgement. Also, refer to the back cover for Limitations of Warranties, Remedies and Damages, and Indemnification and Safe Operation.

STANDARD/CLOSE HEADROOM MODELS		
Capacity (Tons)	Hoist Speeds Ft./Min.	Lift Range
2	20, 24, 32, 40, 48	Up to 254 Ft.
3	20, 24, 32, 40	Up to 254 Ft.
4	10, 12, 16, 20, 24	Up to 127 Ft.
5	10, 12, 16, 20, 24	Up to 127 Ft.
6	10, 12, 16, 20	Up to 127 Ft.
7½	7, 8, 11, 14, 16	Up to 84 Ft.
9	7, 8, 11, 13	Up to 84 Ft.
10	7, 8, 11, 13	Up to 84 Ft.
12	5, 6, 8, 10	Up to 63 Ft.
15	8, 6, 5, 4	Up to 50 Ft.

FIGURE 1. POWERSTAR ELECTRIC CHAIN HOIST

HOOVER CRANE SERVICE COMPANY

ACCESSORIES

Lug Suspension

The lug suspension consists of heat-treated bolts, spacer washers, nuts and cotter pins and it is used to suspend the hoist from a trolley or a permanent structure.

Plain Trolley

The manual push type trolley is designed for use with the Powerstar Electric Hoists. The trolley is adjustable to operate on a range of American Standard beams and flat flange beams.

Geared Trolley

The geared trolley is similar to the plain trolley except it is moved by the means of a hand chain. The hand chain rotates a pinion that drives gears attached to the trolley wheels and moves the trolley along the beam.

Motor Driven Trolley

The motor driven trolley is similar to the geared trolley except the hand chain is replaced by an electric motor. The motor is energized by a reversing contactor mounted in the control enclosure, and it is controlled by pushbuttons located in the pendant control station.

INSTALLATION

UNPACKING INFORMATION

When received, the hoist should be carefully inspected for damage which may have occurred during shipment or handling. Check the hoist frame for dents or cracks, the external cords for damaged or cut insulation, the control station for cut or damaged enclosure, and inspect the load chain for nicks and gouges. If shipping damage has occurred, refer to the packing list envelope on the carton for claim procedure.

Before installing the hoist, make sure that the power supply to which it will be connected is the same as that shown on the nameplate located on the side of the hoist.

The hoist should be connected to a branch circuit which complies with the requirements of the National Electrical Code and applicable local codes. For grounding conductor (green wire). In addition, the beam or other suspension system from which the unit is to be suspended should be permanently grounded.

Trolley Suspended Hoists.

For all trolley suspended hoists, rail stops must be installed. These stops must be positioned to contact the trolley side frames and not exert impact force on the hoist.

If the trolleys are mounted on the hoist lugs at the factory, the side frames are normally positioned so that the wheels will operate on the beam flange that was specified on the order. However, it is recommended that the actual beam flange width be measured before installation to determine the exact spacing of the side frames. The distance between the trolley wheel flanges should be 1/8 to 3/16 inch greater than the beam flange width for straight runway beams, and 3/16 to 1/4 inch if the runway includes sharp curves. Table 3 shows the number of spacer washers to be installed between the trolley side frames and the hoist suspension lug for the beam flange widths indicated.

The number of washers shown in Table 3A is nominally correct. Due to variations in size encountered on structural steel sections, it will be necessary in some cases to vary the numbers used. When used on monorail with curves, lightly lubricatre edges of beam at caurve section with grease.

WARNING: Special trolleys in chart require special side frames with suspension bolts.

On geared trolleys, the bottom of the hand chain loop is normally located two feet above the floor. If it is desired to change this, find the unwelded link and open it by spreading with a chisel or twist one end with a wrench while holding the other end in a vise or another wrench. Remove an even number of links (2, 4, 6, etc.) as necessary to shorten the chain or add an even number of links to lengthen the chain (when lengthening the chain, another open link will be required and this can be made from a welded link by cutting through the weld with a hacksaw). Make certain that the chain is not twisted-then re-install and close open link(s).

Table 3A. Trolley Spacer Washer Arrangement 1/2 Thru 6 Ton

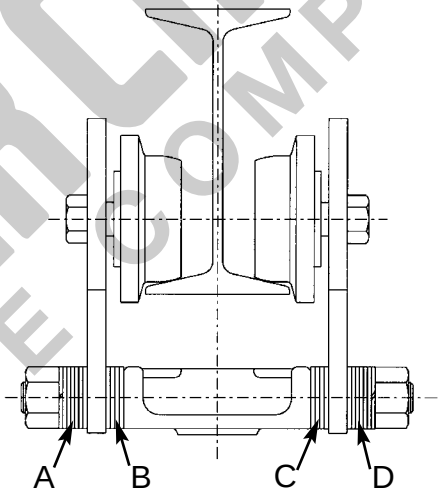

CAUTION: *On the 3 thru 6 ton trolleys, there must be a minimum of 3 washers at locations "A" and "D".*

	Amer. Std. Flange Width	½ Thru 2 Ton				3 Thru 6 Ton			
		No. of Washers				No. of Washers			
		A	B	C	D	A	B	C	D
Standard Trolleys	3-3/8	13	0	0	13				
	3-5/8	11	2	2	11				
	3-7/8	10	3	4	9	Special Trolleys			
	4	9	4	4	9	11	0	0	11
	4-1/8	8	5	5	8	10	1	0	11
	4-5/8	5	8	8	5	7	4	4	7
	5	3	10	10	3	11	0	0	11
	5-1/8	3	10	11	2	11	0	1	10
	5-1/4	2	11	12	1	10	1	1	10
	5-1/2	0	13	13	0	8	3	3	8
Special Trolleys	5-5/8	12	1	1	12	7	4	4	7
	6	10	3	3	10	3	8	7	4
	6-1/4	9	4	5	8	3	8	8	3
	6-3/8	8	5	6	7	11	0	0	11
	7	4	9	9	4	6	5	5	6
	7-1/8	3	10	10	3	6	5	4	7
	7-1/4	3	10	11	2	6	5	5	6
	7-3/8	2	11	12	1	5	6	6	5
	7-1/2	1	12	12	1	4	7	7	4
	7-5/8	0	13	13	0	3	8	8	3
*Minimum Beam Radius		4'0"				5'6"			

*Dimension applies to minimum I-beam and will vary with larger I-beams.

HOSIER CRANE SERVICE COMPANY

Table 3B. Trolley Spacer Washer Arrangement
7 1/2 Thru 15 Ton

Capacity	7 1/2 Ton								9 or 10 Ton								10 or 12 Ton								15 Ton							
Reeving	3-Part Single								3-Part Single								4-Part Single								5-Part Single							
Type of Trolley	Plain				Geared or Motor Driven				Plain				Geared or Motor Driven				Plain				Geared or Motor Driven				Plain				Geared or Motor Driven			
*Flange Width (In.)	No. of Washers								No. of Washers								No. of Washers								No. of Washers							
	A	B	C	D	A	B	C	D	A	B	C	D	A	B	C	D	A	B	C	D	A	B	C	D	A	B	C	D	A	B	C	D
5-1/2	10	0	0	10	8	0	0	8																								
5-5/8	10	0	1	9	8	0	1	7																								
6	9	1	2	8	7	1	2	6	10	0	0	10	8	0	0	8																
6-1/4	8	2	3	7	6	2	3	5	9	1	1	9	7	1	1	7																
6-3/8	7	3	3	7	5	3	3	5	8	2	1	9	6	2	1	7																
7	5	5	5	5	3	5	5	3	6	4	3	7	4	4	3	5	10	0	0	10	8	0	0	8	10	0	0	10	8	0	0	8
7-1/8	5	5	6	4	3	5	6	2	6	4	4	6	4	4	4	4	9	1	0	10	7	1	0	8	9	1	0	10	7	1	0	8
7-1/4	4	6	6	4	2	6	6	2	5	5	4	6	4	4	5	3	9	1	1	9	7	1	1	7	9	1	1	9	7	1	1	7
7-3/8	4	6	7	3	2	6	7	1	5	5	5	5	3	5	5	3	8	2	1	9	6	2	1	7	8	2	1	9	6	2	1	7
7-1/2	3	7	7	3	1	7	7	1	4	6	5	5	3	5	6	2	8	2	2	8	6	2	2	6	8	2	2	8	6	2	2	6
7-5/8									4	6	6	4	2	6	6	2	7	3	2	8	5	3	2	6	7	3	2	8	5	3	2	6
7-7/8									3	7	7	3	2	6	7	1	6	4	3	7	4	4	3	5	6	4	3	7	4	4	3	5
8									2	8	7	3	1	7	7	1	6	4	4	6	4	4	4	4	6	4	4	6	4	4	4	4
8-1/4																	5	5	5	5	3	5	5	3	5	5	5	5	3	5	5	3
8-1/2																	4	6	6	4	2	6	6	2	4	6	6	4	2	6	6	2
8-3/4																	3	7	7	3	2	6	7	1	3	7	7	3	2	6	7	1
9																	2	8	8	2	1	7	7	1	2	8	8	2	1	7	7	1
Minimum Radius Curve = 10' 0"																																

*American Standard "S" beams for flange widths up to 8". Wide flange beams for flange widths over 8".

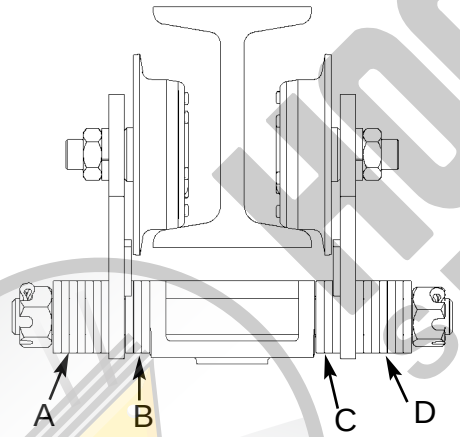

Plain Trolley

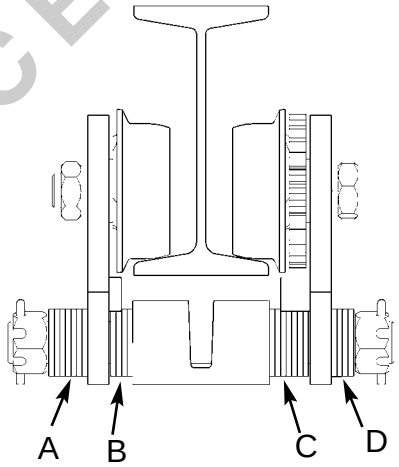

Geared Trolley

For 7½, 9, 10, 12 & 15 Ton units follow the general instructions for installing trolley supported hoists. However use Table 3B to determine the arrangement of the spacer washers. It should be noted that spacer washers must also be used at the sheave hanger (3 and 4-part reeved units) and at the dead end hanger (4 Part reeved units only). The arrangements of the spacer washers at these locations must be the same as those at the hoist suspensions bolts.

On Motor Driven Trolleys, it is necessary to lubricate the trolley wheel gears and the driving pinion with Texaco Novatex #2 or an equivalent heavy cup grease or graphite grease prior to installing trolley on the beam.

The Motor Driven Trolley is wired in such a way that when the hoist motor is operating correctly, as described on page 6, the trolley will move toward the left when the FORWARD (🡐) control is depressed, when facing the trolley motor by standing at the capacity end of the hoist.

For Separate Motor Driven Trolley (trolley shipped separately from hoist), refer to the instructions packed with unit and the information given on page 5.

2-6 Ton Lug Suspended Hoists
For lug suspended hoist, it is suggested that the unit be installed on supports of the design and spacing shown in Table 4.

HOOSIER CRANE SERVICE COMPANY

Table 4. Hoist Support Plate Dimensions

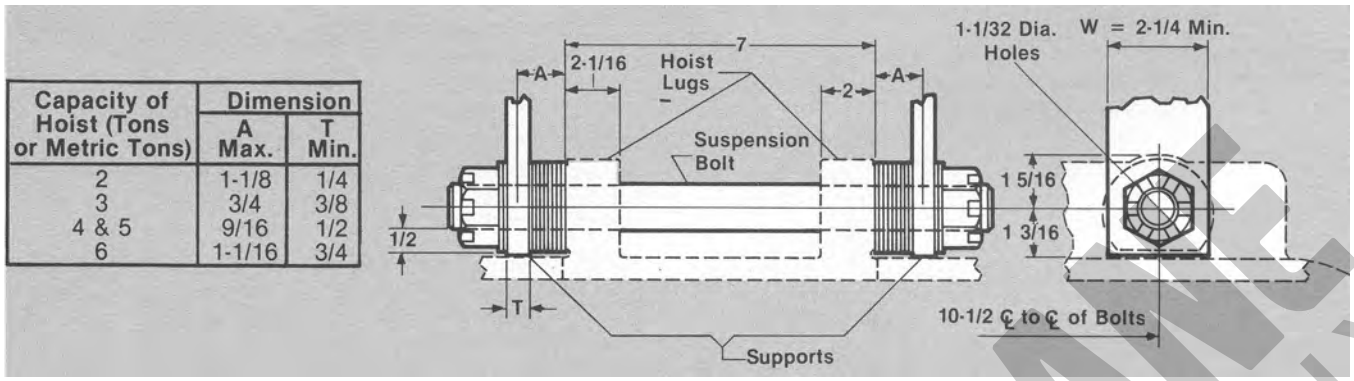

Capacity of Hoist (Tons or Metric Tons)	Dimension A Max.	Dimension T Min.
2	1-1/8	1/4
3	3/4	3/8
4 & 5	9/16	1/2
6	1-1/16	3/4

Supports are to be located at A. Remove a group of washers equal to thickness "T". For proper balance and stress distribution, keep both A dimensions equal.

The suspension bolts furnished with hoist are heat treated alloy steel and dimensions given in the Table 4 diagram are based in the use of these bolts.

Dimensions 'W' and 'T' given for supports are calculated for ordinary medium carbon steel with a design factor of five. Each support is designed for the hoist plus a capacity load.

WARNING: The suspension bolts must be positioned so that the threaded portions are outside of the supports. If the thickness of the supports used is such that the threaded portions of the suspension bolts will be inside the supports, order longer suspension bolts from the factory. When ordering longer suspension bolts, specify the thickness of the distance between the supports.

Hoist Lubrication
After hoist is mounted on its suspension system, remove pipe plug in top of gear cover and install breather plug furnished with hoist. Check oil level by removing small plug in the side of gear cover. Oil level should be in line with bottom of hole. See that the breather plug in top, the drain plug in bottom and the level plug in cover are tight.

NOTE: ***A pint can of chain lubricant is packed loose with the hoist. The load chain was initally lubricated at the factory and this pint of lubricant should be used to renew the lubricant in accordance with the instructions on page 10. The lubricant should only be applied to the load chain. DO NOT pour this lubricant into the gear housing of the hoist.***

Power Supply and Electrical Connections
To insure proper operation and avoid damage to hoist and electrial system observe the following before connecting power cord to the appropiate power supply:

The hoist should be connected to a branch circuit of ample size to prevent excess voltage drop (see Table 5 for minimum operating voltages) and also comply with the requirements of the National Electrical Code and applicabale local codes. The length of the branch circuit conductors and the starting current amperage of the various horsepower hoists should be given special consideration in determining the size of the branch circuit to which the hoist is connected to prevent excess voltage drop during the starting of the hoist.

It is recommended that the branch circuit protective device protecting the hoist and electrical circuit to the hoist have sufficient time delay to permit the motor to start and accelerate its load.

Since the motor in a three phase hoist can rotate in either direction, depending on the manner in which it is connected to the power supply, the direction of hook movement must be checked during the original installation and each time hoist is moved to a new location.

WARNING: ***Serious damage to the hoist can result if the hook is run to the upper or lower limit of travel with the hook operating in a direction opposite to that indicated by the control station.***

Therefore, proceed as follows:

1. Make temporary connections at the power supply.
2. Operate UP (↑) control in control station momentarily. If the hook rises, connections are correct and can be made permanent.
3. If hook lowers, it is necessary to change direction by interchanging the Red lead (marked L3) of hoist power cord at power supply. Under no circumstances should the internal wiring of control station or hoist be changed to reverse hook direction. The wiring is inspected and tested before leaving the factory.

Checking for Adequate Voltage at Hoist
Take voltage readings at the hoist reversing contactor with hoist operating in the UP (↑) direction with full load.

Voltage readings that are below the minimums listed in Table 5 indicate that the circuit supplying power to the unit is undersized.

Table 5. Minimum Operating Voltage

Nominal Current	*Min. Voltage at Instant of Start	Minimum Operating Voltage
230-3-60	190	207
460-3-60	380	414

* The drop in voltage upon energizing the hoist should not be below the value listed.

HOISTEQUIPMENT SERVICE COMPANY

Checking for Twist in Load Chain-
4, 5 and 6 Ton Double Reeved Units
The best way to check for this condition is to run the lower hook, without load, up to within about 2 feet of hoist. If the dead end of the chain has been properly installed, a twist can occur only if the lower hook block has been capsized between the strands of chain. Reverse capsize to remove twist.

Checking for Twist in Load Chain-
7½, 9, 10 , 12 & 15 Ton Units
On the 3 & 5-part single reeved units, the load chain is dead ended on the hook block. On the 4-part single reeved unit, the load chain is dead ended on a hanger suspended from the trolley. If the chain has been properly installed, the only way a twist can occur is if the lower hook block has been capasized between the strands of chain. If this has occured, the strands of chain will be wrapped around each other, and to remove this, reverse the capsize.

Checking Limit Switch Operation
Operate hoist over the entire length of its rated lift, checking upper and lower limit switched for correct operation as follows:

1. Press UP (↑) control and raise the lower hook until top of hook is about one foot below the hoist.
2. Cautiously continue raising the hook until the upper limit switch stops the upward motion. The upper limit switch is set at the factory to stop the hook block 3 inches from bottom of hoist.
3. If adjustment is necessary, see page 12.

CAUTION*: As with any power hoist, the hook block must not be allowed to run into the bottom of hoist or allow the chain to become taut between loose end screw and frame or serious damage will result.*

4. Press DOWN (↓) control and cautiously lower hook until lower limit switch stops the downward motion. From 11 to 15 chain links should be between the loose end link and the hoist entry.
5. If adjustment is necessary, see page 12.

Chain Container (2-6 Ton Units)

All hoist are supplied with a chain container. The chain container is packed loose and it should be attached to the hoist as follows:

Remove loose end screw (A), lockwasher (B) and plain washer (C) from hoist. These items are not required for installation of chain container. See Figure 2.

Insert loose end of chain through channel in chain container chute (D) and into the chain container (N). (Parts D through N are included with chain container.)

Place washer (E) on the longest 3/8 inch screw (F). Now place the end links (G) of the two longer chains into the connecting link (P). Insert screw (F) through the connecting link (P) then washer (H). Insert screw (F) through the chain chute (D), into the loose end screw hole and tighten. Place the washer (J) on the remaining 3/8 inch screw (K), insert screw through slot in chain chute (D) into the hole in the stripper and tighten. Place the end link (L) between the ears on the chain chute (D) and secure with the bolt and nut (M).

NOTE: ***The above applies to installing the chain container on single reeved (2 and 3 Ton) hoists with up to 100 feet of lift and double reeved (4, 5 and 6 Ton) hoists with up to 50 feet of lift. For the chain container for lifts greater than these, auxilliary supports are provided and a separate installation instruction sheet is packed with the chain container.***

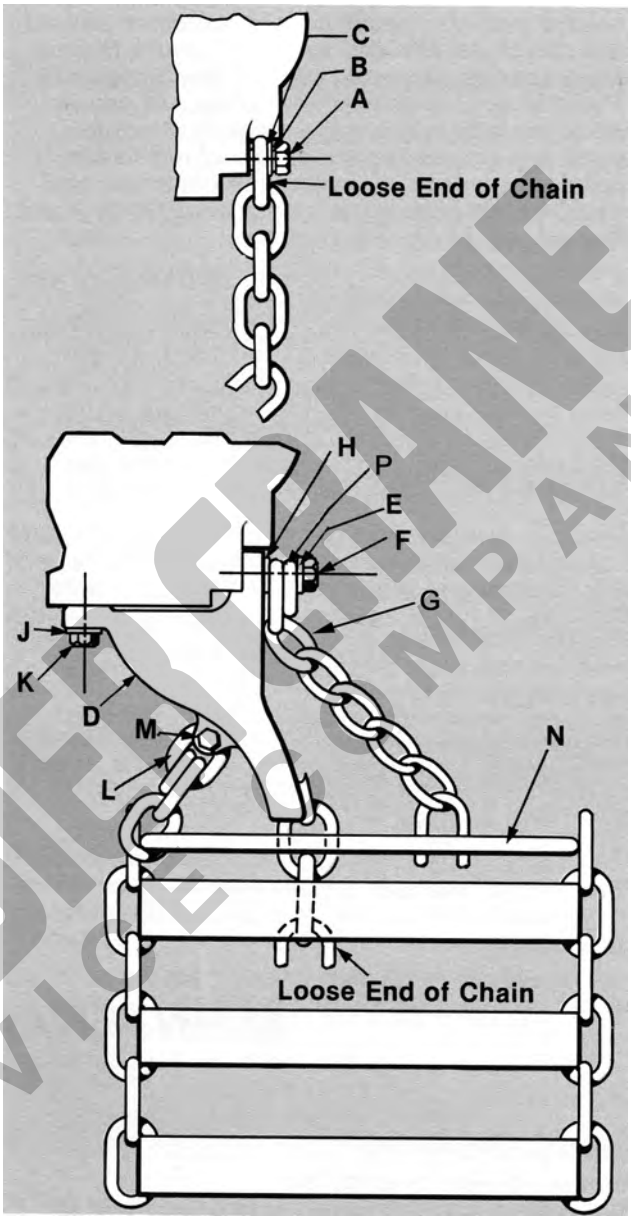

Figure 2. Chain Container Installation

CAUTION: ***The chain container furnished by Columbus McKinnon (CM) is engineered and designed for use with a Powerstar Hoist of specific size and lift. Hoist malfunction and damage to the unit can occur if other than properly engineered Chain Container is used.***

CHAIN CONTATINER (7½-15 TON UNITS)

Each hoist is furnished with a chain container that must be attached to the hoist at installation. An "X" frame and chute are attached to the bottom of the hoist at the factory and the chain container, along with attaching hardware, are shipped loose. After the hoist and trolley are installed and the electrical connections are properly completed, operate the hoist in the down direction until the lower limit switch stops the downward motion.

HOOSIER CRANE SERVICE COMPANY

Attach the eight chain container support chains to the four legs if the “X” frame as illustrated in Figure 2.1.

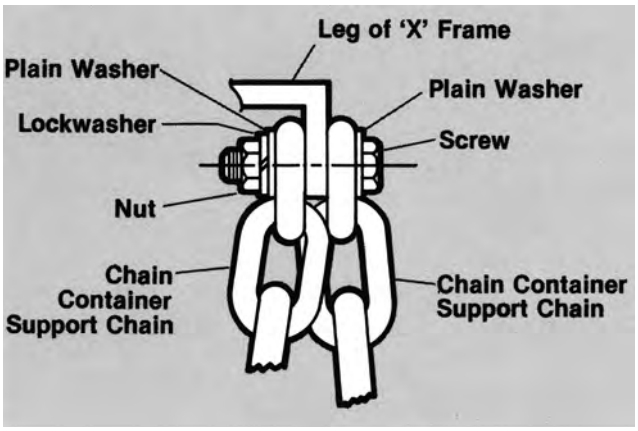

Figure 2.1 Support Chain Attachment

After the chain container is installed, use the instructions in Manual to reset the upper limit switch so that the uppermost point of hook travel is ust below the bottom of the chain container.

Under no condition should the hook or load be permitted to come into contact with the chain container. If this occurs, the chain container may be damaged, the function of the chain container may be interfered wint and/or the support bracket and fasteners may be imperiled.

NOTE: ***On units with very long lifts, auxiliary supports may be provided for the chain container. For such units, separate installation instructions will be provided.***

OPERATION

1. The Columbus McKinnon Load Protector is designed to allow the second reduction gear to slip on an excessive overload. An overload is indicated when the hoist will not raise the load. Should this occur, immediately release the UP (↑) control to stop the operation of the hoist. At this point, the load should be reduced to the rated hoist capacity or the hoist should be replaced with one of the proper capacity. When the excessive load is removed, normal hoist operation is automatically restored.

   CAUTION: ***The Protector is susceptible to over heating and wear when slipped for extended periods. Under no circumstance should the clutch be allowed to slip more than a few seconds. Because of this, the Powerstar Hoist is not recommended for use in any application where there is a possibility of increasing and already suspended load to the point of overload. This includes elevator and dumbwaiter type installation, hoppers that are loaded in mid-air, etc.***

   If the hoist is used at unusal extremes of ambient temperatures, above 150°F or below 15°F, changes to the torque settings may permit the hoist to raise a larger than normal load at the lower temperatures or slip the clutch at a lower temperatures or slip the clutch at a lower than normal load at the higher temperatures. If the hoist is to be used consistently at either of these temperature extremes, the Protector should be re-adjusted as described on page 12.

2. These hoists are equipped with an adjustable screw limit switch which automatically stops the hook at any predetermined point in either hoisting or lowering. The adjustable screw limit switch is to be set to stop the hook before it reaches the hoist.

   The protection offered by the adjustable screw limit switch only exists when the power supply to the hoist motor is correctly phased as described on page 6.

3. The 7.5/2.5 H.P., 2 speed hoists are equipped with thermostatically controlled cooling fans which energize at a preset shroud air temperature and de-energize when sufficient cooling has been achieved. Since the cooling fans are controlled by the thermostat, they may not run when the hoist is operating or they may continue to run after hoist operation has stopped.

4. The hoist and trolley motors are equipped with thermal switches that interrupt the “up” side of the control circuit when either motor exceeds its safe operating temperature. If one of these switches should open while a load is suspended from the hoist, the hook may be lowered and the trolley may be moved in either direction to remove the load. Further lifting is prevented until the switch automatically resets when the overheated motor has cooled sufficiently to resume operation. This takes approximately one hour under normal conditions.

   Since the trolley motor thermal switch is in the hoist control circuit, the trolley can be operated when its motor is overheated. Therfore, to reduce the possibility of trolley motor burn-out, only move the trolley enough to allow the load to be removed from the hoist.

5. The control station used on the two speed hoist is similar to the single speed unit, except that either of two definite speeds may be selected by the operator in both lifting and lowering. Each control, when partially depressed, provides slow speed and when fully depressed, gives fast speed, while full release allows hoist to stop. Rated lifting speeds are shown on hoist identification plate.

   Slow speed is intended as a means of carefully controlling or “spotting” the load, although the hoist may be operated solely at this speed for short peroid of time if desired. It is not necessary to operate in the slow speed position as the hoist will pick up a capacity load at fast speed from a standing start. It is not necessary to hesitate at the slow position when moving control from Stop to Fast position or vice versa.

6. If material being handled must be immersed in water, pickling baths, any liquid or dusty or loose solids, use a sling chain of ample length so that the hook is always above the surface. Bearings in the hook block are shielded only against ordinary atmospheric conditions.

MAINTENANCE AND CARE

LOAD CHAIN CLEANING AND INSPECTION

First clean the load chain with a non-acid or non-caustic type solvent. The slack the chain and make a link-by-link inspection for nicks, gouges, twisted links and excessive wear or stretching. Chain should be gaged throughout its length and replaced if beyond serviceable limits.

HOISTEQUIPMENT SERVICE COMPANY

CAUTION*: There is no safe substitute for Columbus McKinnon Hoistaloy® load chain because of size requirements and physical properties. These chains are specially heat treated and hardened and should always be returned to the factory for repair. Before returning a chain to service, lubricate liberally with Lupriplate, Bar and Chain Oil 10-R (Friske Bros. Refining Co.) or equal lubricant. Remove excess lubricant from the chain by wiping with a cloth.*

Gaging Load Chain Wear
To determine if load chain should be continued in service, check gage lengths as indicated in Figure 3. Chain worn beyond length indicated, nicked, gouged or twisted should be replaced before returning hoist to service. Chain should be clean, free of twists and pulled taut before measuring.

Note that worn chain can be an indication of worn hoist components. For this reason, the hoist's chain guides, hook blocks and liftwheel should be examined for wear and replaced as necessary when replacing worn chain.

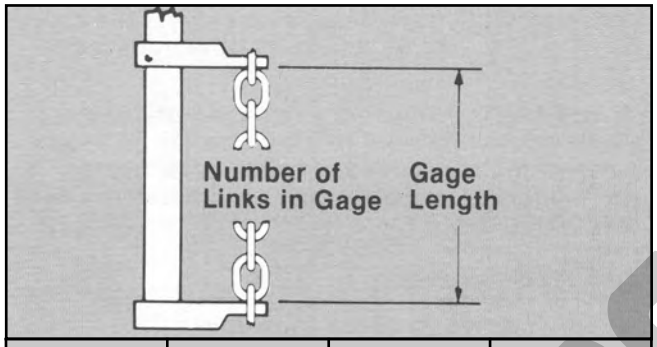

Hoist Capacity (Tons)	Dia. of Chain Stock (Inches)	No. of Links To Gage	Max Gage Length Allowable Used Chain (Inches)
2-15	.562	11	$18^{13}/_{16}$"

Figure 3. Gaging Load Chain Wear.

Cutting Chains

CM Hoistaloy® load chain is hardened and is difficult to cut. However, the following methods are recommended when cutting a length of new chain from stock or cutting off a length of worn chain.

1. Use a 7 inch minimum diameter by 1/8 inch thick abrasive wheel (of type recommended by wheel supplier) that will clear adjacent links.
2. Use a grinder and nick the link on both sides (Figure 4). Then secure the link in a vise and break off with a hammer.

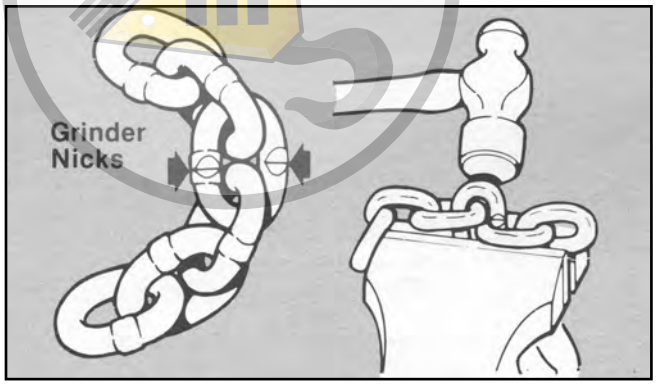

Figure 4. Cutting Chain by Nicking.

HOOKS

Hooks damaged from chemicals, deformations or cracks, or that have more than a 10° twist from the plane of the unbent hook or excessive throat opening or seat wear must be replaced. See Figure 5 for hook inspection.

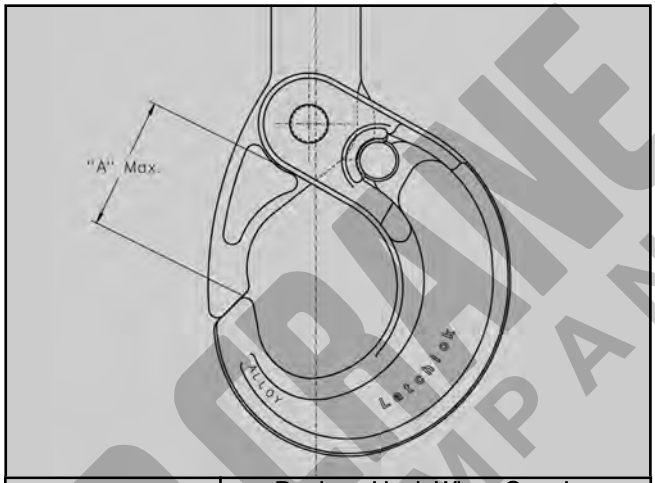

Hoist Capacity (Tons)	Replace Hook When Opening Is Greater Than:
	"A" Max.
2 & 3	2 1/8
4, 5 & 6	2 7/8
7½	2 7/8
9, 10 & 12	3 7/8
15	4 11/16

Figure 5. Hook Inspection.

Any hook that is twisted or has excessive throat opening indicates abuse or overloading of the unit. Other load sustaining components of the hoist should be inspected for damage and replaced if the hook shows evidence of any of the above.

Check to assure latch is not damaged or bent and that it operates properly. Depress the latch and release it to make sure it springs back to engage the tip and close the throat opening. If it does not spring back, replace the latch and spring.

HOIST ELECTRIC BRAKE

It is recommended that the brake be periodically disassembled to check the friction lining and friction surfaces for wear, scoring and warpage. To do this, disconnect the hoist from the power supply and remove the motor cover and shroud. Disconnect the brake coil (620-226) leads from the rectifier and reversing contactor. Back-off brake nuts and remove the coil housing (670-212). Remove the brake springs (670-19) and the pressure plate (670-155). Remove the brake discs (670-17) and the intermediate plates (670-16). Examine the friction surfaces of the pressure plate, intermediate plates and friction discs for wear, scoring or warpage. Replace any parts that are worn or damaged from excessive scoring or warpage. Also, Check the teeth on the brake hub (670-43) and brake discs (670-17) for wear and replace parts that are worn. Reassemble the brake components and then adjust the air gap per the instructions on page 11.

HOUSER CRANE SERVICE COMPANY

LUBRICATION

Hoist Lubrication

Gears. Check oil level in gear housing at least once a month, maintaining it at the bottom of oil level in gear cover.

Drain housing every 2-3 years and refill with two gallons of hydraulic and transmission oil which conforms to Factory Specifications.

CAUTION: The Protector is to operate in the above mentioned oil. Do not use any other type of lubricant or the Protector will not operate properly and parts could be damaged.

The limit switch gears are of molded nylon and require no lubrication. Apply a light film of machine oil to the limit switch shaft threads at least once a year.

Chain Guides, Liftwheel & Lower Sheave Wheel.

When the hoist is disassembled for inspection and/or repair, the chain guides, lower sheave wheel (on double chain units) and liftwheel must be lubricated with Lubriplate, Bar and Chain Oil 10-R (Friske Bros. Refining Co. or equal) prior to reassembly. Apply sufficient lubricant to obtain natural runoff and full coverage.

Load Chain

Keep chain lubricated with a small amount of lubricant, This will greatly increase the life of the chain. Do not allow the chain to run dry.

Keep it clean and lubricate at regular intervals with Lubriplate, Bar and Chain Oil 10-R (Friske Bros. Refining Co.) or equal lubricant. Normally, weekly lubrication and cleaning is satisfactory, but under hot and dirty conditons, it may be necessary to clean the chain at least once a day and lubricate it serveral times between cleanings.

When lubricating the chain, apply sufficient lubricant to obtain natural runoff and full coverage.

Bearings

All bearings except the lower hook thrust bearings are pre-lubricates or are in a oil bath and need no lubrication. The lower hook thrust bearing should be lubricated at least once a month with heavy duty machine oil.

MISCELLANEOUS

If the liftwheel is removed from the unit, the spline should be coated wiht an EP type grease (such as Evans Products Co. Anti-Scoring Extreme Pressure Lub. No. 3 or equal) before it is reassembled into the unit.

If the lower hook block or energy absorption system is disassembled, coat the disc springs with extreme pressure molybdenum disulfide paste (Dow Corning Molykote Gn or equal) before it is reassembled.

Trolley Lubrication

Trackwheel bearings are pre-lubricated and require no lubrication.

Geared Trolley

Once a month lubricate trackwheels gears with Texaco Novatex No. 2 or an equivalent heavy cup grease or graphite grease.

Every six months lubricate handwheel shaft bearings with 3 in 1 or light machine oil

Motor Driven Trolleys

Once a month lubricate trackwheel gears with Texaco Novatex No. 2 or an equivalent heavy cup grease or graphite grease.

The Motor bearings and reduction gears require no additional lubrication. However, if gears are disassembled, upon reassembly use Texaco Novatex No. 1 or an equivalent medium cup grease.

IMPORTANT: To asssure long life and top performance, be sure to lubricate the various parts of the Powerstar using the lubricants specified above. If desired, these lubricants may be purchased from the factory.

ADJUSTMENTS

Hoist Electric Brake Assembly

The correct air gap between the coil housing and pressure plate, when the brake is not energized is 0.060 to 0.070 inch, and it does not need to be re-adjusted until the gap reaches 0.187 inch.

To adjust the brake, proceed as follows (see Figure 6):

1. Remove any load from the lower hook of the hoist and disconnect the hoist from the power supply.
2. Remove motor cover.
3. Adjust the air gap by turning the brake nut clockwise until there is a uniform gap of 0.060 to 0.070 inch between the coil housing and pressure plate. The air gap should be gaged at three locations near the brake studs.

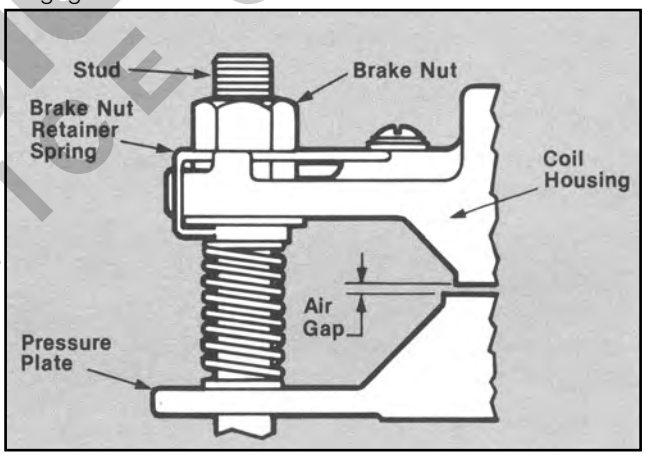

Figure 6. Brake Air Gap - Typical at 3 Brake Studs

Note: It is not necessary to remove the brake nut retainer springs to adjust the air gap. After the correct air gap is obtained, it may be necessary to rotate the brake nut so that the sides of the retainer spring engage the flats on the nut.

4. After the correct air gap is obtained, the space between the button of the cutout switch (670-247) and the head of the cutout actuator screw must be checked. To do this, measure the air gap between the pressure plate and coil housing at the brake stud nearest the cutout switch (Figure 7). Subtract 0.030 inch from the measured air gap, and this should be the space between the button of the cutout switch and the head of the screw. If the cutout switch space is other than the measured air gap less 0.030 inch, loosen the locknut on the pressure plate and rotate the screw until the proper space is obtained. Lock the screw in this position by tightening the locknut against the pressure plate (Figure 7).
5. Replace the motor cover, reconnect the hoist at the power supply and check operation

HOOSIER CHAIN SERVICE COMPANY

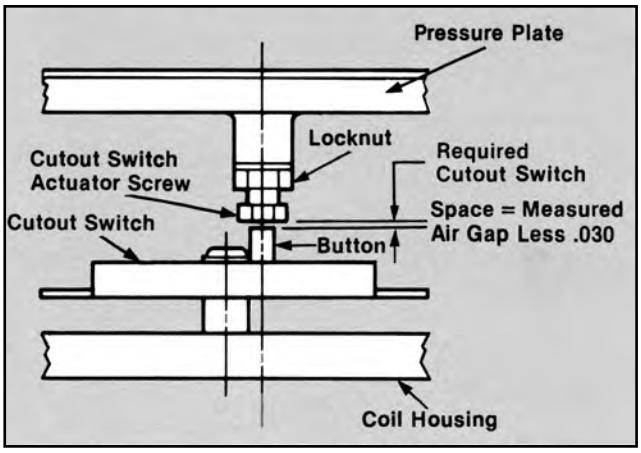

Figure 7. Cutout Switch Actuator Screw Adjustment

Protector

The Protector is adjusted at the factory so that the hoist will refuse to lift approximately 140% of its rated capacity. If the periodic inspections indicate that the Protector is slipping at other than 140% of rated hoist capacity, the device can be adjusted as follows:

1. Attach the lower hook to a load of 140% of rated hoist capacity or a dynamometer (scale) attached to a "dead load' (Table 6).

Table 6. Protector Slip Point

Hoist Capacity (Tons)	Slip Point of Protector (Pounds)
2	5,600
3	8,400
4	11,200
5	14,000
6	16,800
7½	18,750
9	22,500
10	25,000
12	30,000
15	37,500

2. Energize hoist in the UP (↑) direction and determine if setting is greater or less than 140% of rated capacity.
3. Remove adjusting access cover and install adjusting tool (furnished with hoist). The shaft portion of the adjusting tool engages a hole in the main frame, and teeth of the adjusting rod must engage the teeth of the Protector.
4. Adjust slip point of the clutch by turning the nut portion of the adjusting tool. If slip point is greater than 140% of rated hoist capacity, turn adjusting tool clockwise to decrease. If slip point is less than 140% of rated hoist capacity, turn adjusting tool counterclockwise.
5. Remove the adjusting tool, re-install access cover and operate hoist in UP (↑) direction to check the slop point of the Protector. If necessary, repeat step 4 until the proper slip point is reached.

NOTE: The adjusting tool must be removed while the hoist is in operation or serious damage to the hoist gears and/or the Protector could result.

CAUTION: Under no circumstances should the slip point of the Protector be adjusted to exceed 140% of rated hoist capacity. Doing so would allow an excessive overload to be applied to the hoist that may cause immediate failure of some load carring in part or create a defect causing subsequent failure at less than rated capacity.

Adjusting Fan Thermostat (2 Speed Hoists with 7.5/2.5 HP Motors)

Cooling fans are controlled by a thermostat which energizes at a preset shroud air temperature and de-energizes when cooling has been complered. The thermostat should be adjusted to energize fans 130%F.

Adjusting Screw Limit Switch

Setting Adjustable Screw Limit Switch:

For safe operation, the upper screw limit seitch should be adjusted to stop the hoist when the hook block is three inches below the bottom of the hoist on units without energy absorption system or 16½ inches on units with energy absorption system. The lower screw limit switch should be adjusted to stop the hoist from 11 to 15 chain links are remaining between the loose end link and the hoist entry.

If limit switch operation has been checked as described on page 8 and is not operating correctly or is not automatically stopping the hook at a desired position, proceed as follows:

1. Disconnect hoist from power supply.
2. Remove shroud access cover.
3. Upper and lower limit switches are identified on the fiber insulator.
4. Loosen the screws to permit guide plate to be moved out of engagement with the traveling nuts (Figure 8).
5. Reconnect hoist to power supply
6. Run hook to desired upper or lower position, cautiously operating the hoist without load.
7. Disconnect hoist from power supply.

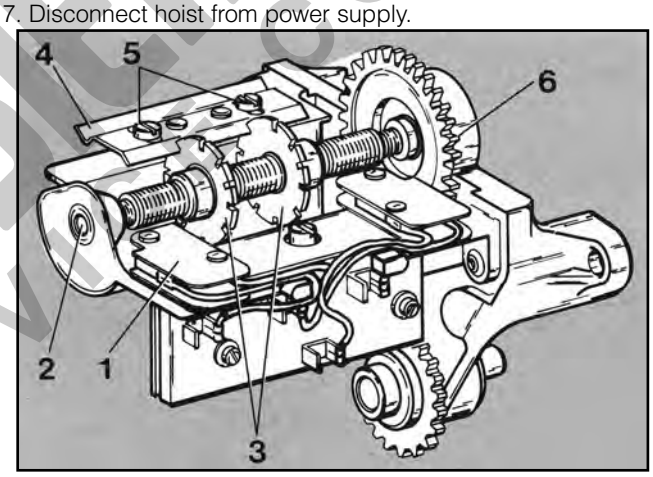

1. Limit Switch Sub-Assembly
2. Limit Switch Shaft
3. Traveling Nuts
4. Guide Plate
5. Screws
6. Gear Train

Figure 8. Adjustable Screw Limit Switch

8. Moving one travel nut toward the other increases hook travel and away from the other decreases the travel. To adjust the upper limit, turn the nut nearest the switch indicated as "Upper Limit Switch". Turn the desired nut until it just breaks the limit switch contacts. An audible click will be heard as the switch opens. Continue to rotate the nut toward the switch and additional two full teeth.
9. Reposition the guide plate in the next slot and securly tighten screws.
10. Reconnect hoist to power supply and check the stopping point of the hook by first moving the hook about 10 inches away from the desired stopping point. Then move the hook towards the desired stopping point by jogging cautiously until the limit switch stops the motion. If the stopping point is not the desired position, repeat the above instructions.
11. Double check the adjustment by moving the hook about 2 feet from the desired stopping point and then run the hook into the limit with the control held in the fully depressed position.

HOOSIER CHAIN COMPANY
RESERVED

12. Fine adjustment of the screw limits setting may be obtain by inverting the guide plate. The offset on the plate gives adjustments equivalent to ½ notch (see Table 7A). When inverting the plate, it may be necessary to use the notch adjacent to the one used in the preliminary setting.

Table 7A. Hook Travel Per Notch of Limit Switch Nut

	Single Reduction Unit		Double Reduction Unit	
Hoist Capacity (Tons)	Length of Max. Lift (Ft.)	Hook Travel Per Notch (In.)	Length of Max. Lift (Ft.)	Hook Travel Per Notch (In.)
2 & 3	47'0"	3/4	127'	2
4, 5 &6	23'6"	3/8	63'	1

The adjustable screw limit switch is not to be used as a normal means of stopping the hoist.

The 3 and 4-part single reeved hoists are equipped with a double reduction type adjustable screw limit switch. As such, the maximum lift and hook travel per notch on the standard units are shown in Table 7B.

Table 7B. Screw Limit Switch

Reeving	Length of Max. Lift (Feet).	Hook Travel Per Notch (In.)
3 part, single	42' - 4"	0.67
4 part, single	31' - 9"	0.50
5 part, single	25' - 3"	0.40

NOTE: Longer lifts are obtainable by using special limit switch gearing available from the factory on a special basis.

For proper operation, the upper screw limit switch should be adjusted to stop the hoist when the top of the snubber block is in line with the bottom of the chain container. The lower screw limit switch should be adjusted to stop the hoist when from 8 to 12 chain links are remaining between of the chute.

Trolley Electric Brake Assembly (Optional Accessory)

The stopping distance of the Motor Driven Trolley equipped with an electric brake can be increased or decreased by adjusting the brake pressure. To increase brake pressure and thereby decrease stopping distance, move the brake spacer washers progressively from the nut side of the brake field plate to the spring side. To decrease brake pressure, and thereby increase the stopping distance, move the washers in an opposite manner. Both studs must have the same number of washers on the spring side of the brake field plate, and the air gap between the field and armature must set at 0.025 inch.

The correct air gap between armature and field, when the brake is not energized, is 0.025 inch and need not be adjusted until the gap reaches 0.045 inch.

To adjust the air gap or brake pressure, proceed as follows:

1. Disconnect hoist from power supply.
2. Remove brake cover.
3. Before adjusting air gap or brake pressure:
   a. Back off the stud nuts and examine friction linings and friction surfaces for excessive wear, scoring or warpage.
   b. Check shading coils to be sure they are in place and not broken. A missing or broken shading coil will cause the brake to be noisy when hoist is operated. Any of these symptoms indicate the need for replacement of parts.
4. If brake pressure is to be adjusted, move brake spacer washer to the desires side of the brake field plate to increase or decrease pressure as indicated above.
5. After spacer washers are positioned, turn adjusting nuts clockwise gaging the air gap at both ends.
6. Replace brake cover, reconnect the power and check operation. If the stopping distance of the trolley is not as desired, repeat the above.

ELECTRICAL DATA

Open circuits in the coils of electrical components may be detected by isolating the coil and checking for continuity with an ohmmeter or with the component in series with a light or bell circuit.

Shorted turns are indicated by a current draw substantially above normal (connect a meter in series with suspected element and impose normal voltage) or DC resistance substantially below normal. The current method is recommended for coils with very low DC resistance.

Motor current draw in the stator should be measured with the motor running. Brake and contactor coil current should be measured with the core iron in operating position.

Table 8 provides the electrical data for the motors tansformer and coils.

Typical wiring diagrams are show in Figures 9-12.

Table 8. Electrical Resistance Data

TRANSFORMER		
Voltage	Leads	*D.C. Resistance (Ohms)
230/460 to 115	16-17 18-19 R-R BR-BR	40 40 30 30
440/380/220 to 48	R-R BR-BR 16-17 16-18 16-19	1.5 18 8.1 33 41
380 to 230	B-B R-R	50 30
575 to 230	B-B R-R	50 30

FAN MOTOR		
Voltage-Phase Hertz	Full Load Current (Amps)	*D.C. Resistance (Ohms)
230-3-60	.12	595

CONTACTOR COIL			
Type Contactor	Voltage	Normal Current (Amps)	*D.C. Resistance (Ohms)
Hoist Reversing	115	0.12	123
Hoist Speed Selecting	115	0.12	61
Trolley Reversing (Type SD)	115	0.12	132
Trolley Reversing (Type D)	120	0.23	81
Hoist Reversing (Type D)**	48	0.051	19
Hoist Speed Selecting	48	0.051	20
Trolley Reversing (Type SD)	48	0.051	15

BRAKE COIL		
Voltage	Normal Current (Amps)	*D.C. Resistance (Ohms)
115, D.C.	0.29	12.2

*Resistance values listed are nominal and they may vary slightly from motor to motor or component.

**Supplied on separate motor driven trolley.

† With motor running at full load and hoist operating in the up direction.

INDUSTRIAL CRANE SERVICE COMPANY

TROLLEY MOTORS				
Volts-Phase Hertz	H.P.	R.P.M. (Syn.)	Full Load Amps	Line to Line Resistance (Ohms) @ 25° C.
230/460-3-60	½	1200	.93/.46	14.75/59.0
230/460-3-60	½	600	3.6/1.8	11.4/45.6
230/460-3-60	3/4	1800	2.2/1.1	9.16/36.7
575-3-60	½	1200	0.75	92.5
230-3-60	.5/.25	1800/900	1.83/2.0	11.4/26.8
230-3-60	.75/.38	1800/900	24./2.2	7.8/20.4
460-3-60	.5/.25	1800/900	.9/1.0	45.8/108
460-3-60	.75/.38	1800/900	1.3/1.1	82.9/32.1
575-3-60	½	600	1.45	74
575-3-60	3/4	1800	0.89	60.2
575-3-60	.75/.38	1800/900	1.08/1.04	47.9/12.5
230-3-60	.5/.25	1200/600	3.3/2.8	9.0/22.8
460-3-60	.5/.25	1200/600	1.7/1.4	36.2/92.4
230/460-3-60	3/4	1200	2.8/1.38	7.6/30.5
220/380-3-60	½	1200	1.9/1.1	9.8/39.2

HOIST MOTORS Electrical Resistance Data							
Volts-Phase Hertz	H.P.	R.P.M. (Syn.)	Full Load Amps	Lead No.	D.C. Resistance (Ohms)	Lead No.	D.C. Resistance (Ohms)
208/416-3-60	5	1800	14.7/7.4	T1-T4 T2-T5 T3-T6	0.8	T7-T8 T8-T9 T7-T9	1.8
220/380-3-50		1500	14.0/7.1				
230/460-3-60		1800	13.8/6.9				
220/415-3-50		1500	14.0/6.9				
208/416-3-60	7.5	1800	17.4/8.7	T1-T4 T2-T5 T3-T6	0.5	T7-T8 T8-T9 T7-T9	0.9
220/380-3-50		1500	21.5/10.6				
230/460-3-60		1800	25.0/12.5				
220/415-3-50		1500	21.5/10.5				
550-3-50	5	1500	6	T1-T2 T1-T3 T2-T3	2.9 2.8 2.9	≈	≈
575-3-60		1800	5.5				
550-3-50	7.5	1500	8.6	T1-T2 T1-T3 T2-T3	2.5 2.5 2.5	≈	≈
575-3-60		1800	8.4				
208-3-60	5/1.67	1800/600	13.9/10.6	T1-T2 T1-T3 T2-T3	3.8 3.8 3.8	T11-T12 T11-T13 T12-T13	0.8 0.8 0.8
220-3-50		1500/500	11.3/12.1				
220-3-60		1800/600	12.6/10.9				

HOOSIER CRANE SERVICE COMPANY

HOIST MOTORS (Continued) Electrical Resistance Data							
Volts-Phase Hertz	H.P.	R.P.M. (Syn.)	Full Load Amps	Lead No.	D.C. Resistance (Ohms)	Lead No.	D.C. Resistance (Ohms)
380-3-50	5/1.67	1500/500	6.0/4.7	T1-T2	16.2	T11-T12	2.4
415-3-50		1500/500	6.3/4.8	T1-T3	16.2	T11-T13	2.1
460-3-60		1800/600	6.4/4.5	T2-T3	16.2	T12-T13	2.3
208-3-60	7.5/2.5	1800/600	22.0/14.4	T1-T2	1.9	T11-T12	0.5
220-3-50		1500/500	23.1/15.8	T1-T3	1.9	T11-T13	0.5
230-3-60		1800/600	21.3/14.1	T2-T3	1.9	T12-T13	0.5
380-350	7.5/2.5	1500/500	1035/7.1	T1-T2	7.0	T11-T12	1.8
415-3-50		1500/500	10.4/7.4	T1-T3	7.0	T11-T13	1.8
460-3-60		1800/600	10.3/6.8	T2-T3	7.0	T12-T13	1.8
550-3-50	5/1.67	1500	5.4/4.6	T1-T2	25.	T11-T12	4.0
575-3-60		1800	5.0/4.0	T1-T3	25.3	T11-T13	4.0
				T2-T3	25.3	T12-T13	4.0
550-3-50	7.5/2.5	1500	8.5/6.4	T1-T2	10.8	T11-T12	3.1
575-3-60		1800	8.2/5.8	T1-T3	10.6	T11-T13	3.2
				T2-T3	10.9	T12-T13	2.9

*Resistance values listed are nominal and they may vary slightly from motor to motor or component.

**Supplied on separate motor driven trolley.

† With motor running at full load and hoist operating in the up direction.

TESTING

Prior to initial use, all hoists in which the load sustaining parts have be altered, replaced or repaired, or hoists that have not been used within the preceding 12 months should be tested by or under the direction of an appointed person and a record of the test should be made. The test should consist of operating the hoist in the lifting and lowering directions to check the operation of the unit, that the brake holds when the control is released and the upper limit switch stops the operation at the upper limit of the lift. On two speed units, the test are to be conducted in slow and fast speed. If practical, the trip setting of the upper limit switch should be conducted by hand.

Test the unit first in the unloaded state and then with a light load of 50 pounds times the number of parts of load chain. After it is assured that the unit is operating properly, test the hoist with a rated capacity load. After the rated load test, the function of the overload device is to be tested. The overload device should allow lifting a rated capacity load, reversing a descending rated capacity load, and it should prohibit the lifting of a load 140% of rated load capacity. If the overload device is not functioning properly, it should be adjusted as described on page 12.

NOTE: *For additional information on inspection and testing, refer to the current issue of ANSI B30.16 "Overhead Hoists" obtainable from American National Standards Institute, 1430 Broadway, New York, N.Y. 10018, U.S.A.*

NOTE: Wiring Diagrams shown are representative. Consult diagram in hoist or furnished with unit.

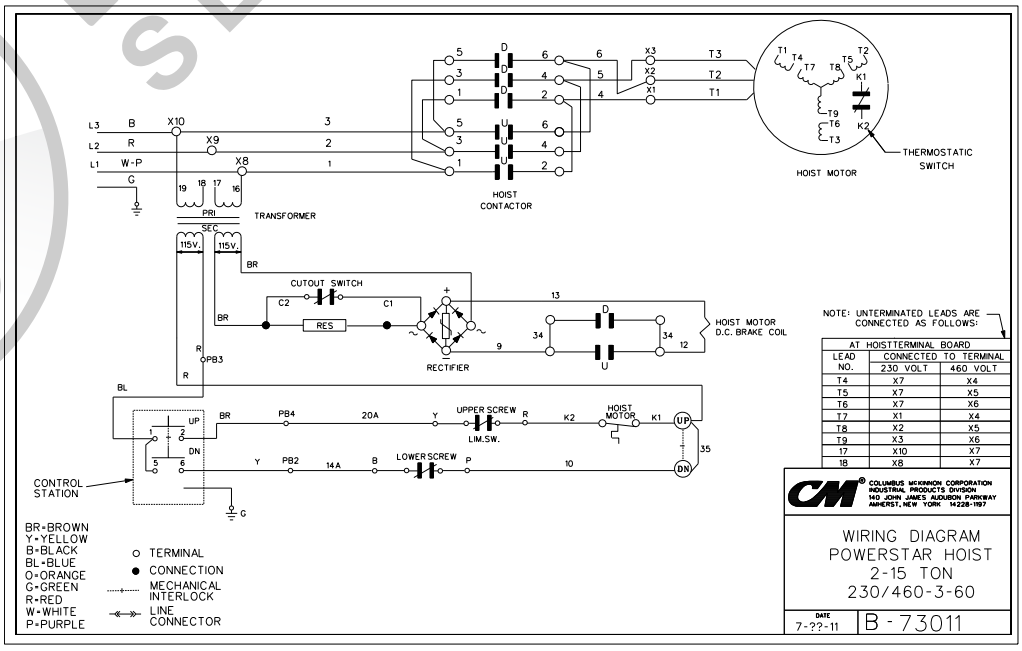

Figure 9.
Wiring Diagram
Single Speed Hoist

HOOSIER CRANE SERVICE COMPANY

NOTE: Wiring Diagrams shown are representative. Consult diagram in hoist or furnished with unit.

Figure 10.
Wiring Diagram
Single Speed Hoist
With Motor Driven
Trolley

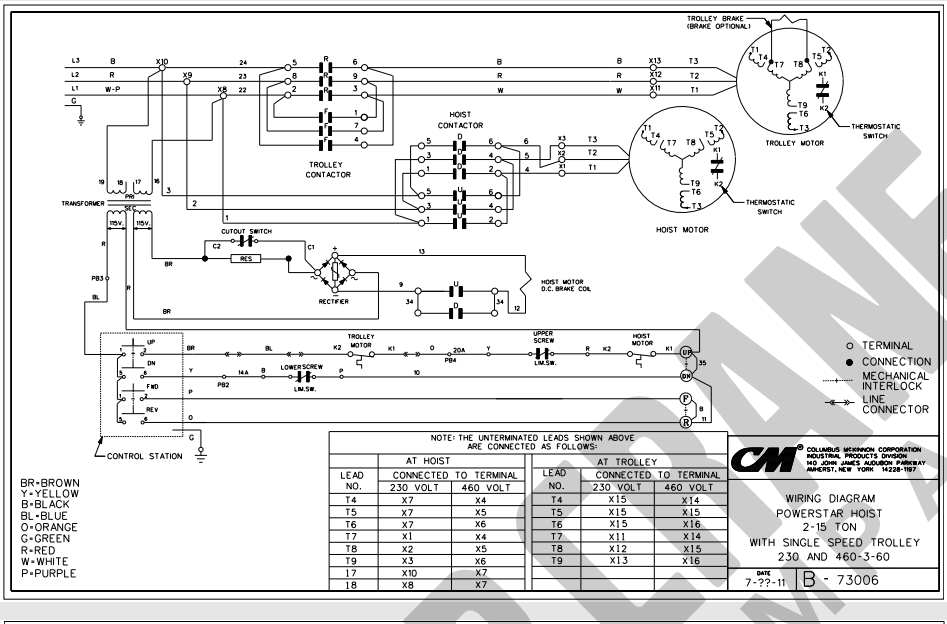

LEAD NO.	AT HOIST CONNECTED TO TERMINAL 230 VOLT	AT HOIST CONNECTED TO TERMINAL 460 VOLT
T4	X7	X4
T5	X7	X5
T6	X7	X6
T7	X1	X4
T8	X2	X5
T9	X3	X6
17	X10	X7
18	X8	X7

LEAD NO.	AT TROLLEY CONNECTED TO TERMINAL 230 VOLT	AT TROLLEY CONNECTED TO TERMINAL 460 VOLT
T4	X15	X14
T5	X15	X15
T6	X15	X16
T7	X11	X14
T8	X12	X15
T9	X13	X16

Figure 11.
Wiring Diagram
Two Speed Hoist

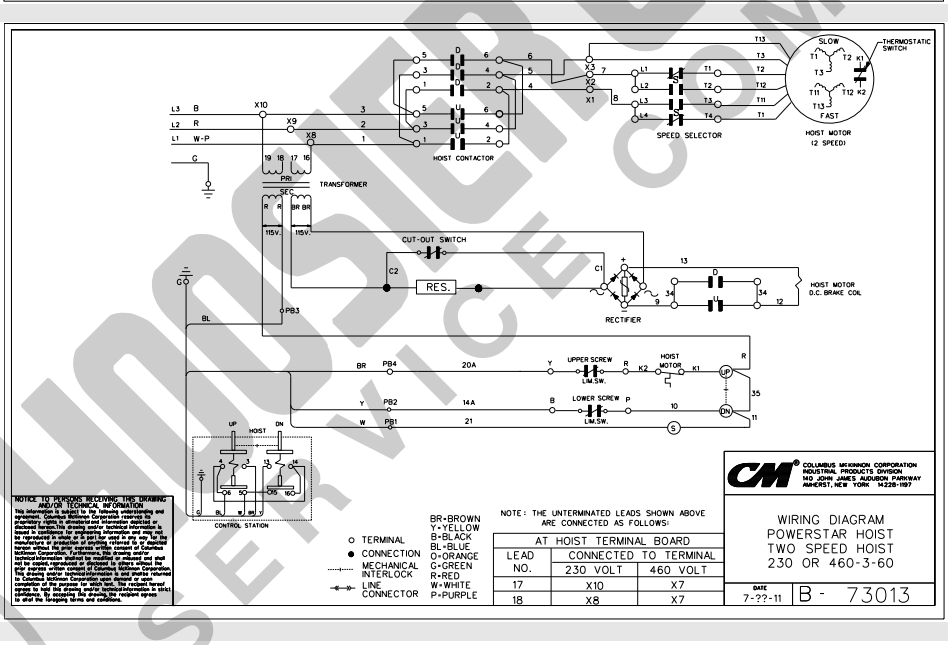

LEAD NO.	AT HOIST TERMINAL BOARD CONNECTED TO TERMINAL 230 VOLT	AT HOIST TERMINAL BOARD CONNECTED TO TERMINAL 460 VOLT
17	X10	X7
18	X8	X7

Figure 12.
Wiring Diagram
Two Speed Hoist
With Motor Driven
Trolley

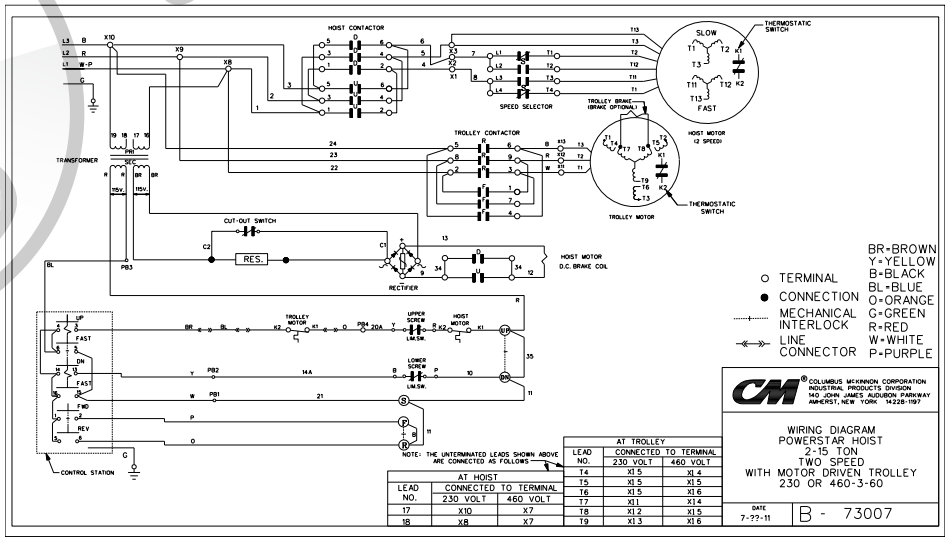

LEAD NO.	AT HOIST CONNECTED TO TERMINAL 230 VOLT	AT HOIST CONNECTED TO TERMINAL 460 VOLT
17	X10	X7
18	X8	X7

LEAD NO.	AT TROLLEY CONNECTED TO TERMINAL 230 VOLT	AT TROLLEY CONNECTED TO TERMINAL 460 VOLT
T4	X15	X14
T5	X15	X15
T6	X15	X16
T7	X11	X14
T8	X12	X15
T9	X13	X16

HOOSIER CRANE SERVICE COMPANY

TROUBLESHOOTING

ALL HOISTS		
PROBLEM	CAUSE MAY BE	REMEDY
1.) Hook does not raise or lower	a.) No voltage at hoist	a.) Main line or branch circuit open; branch line fuse blown or circuit breaker tripped. Close replace or reset. Grounded or faulty connection in supply lines or current collectors.
	b.) Phase failure (Single Phasing)	b.) Open circuit, grounded or faulty connection in one line of supply system, collectors, hoist wiring, reversing contactor, motor leads or windings. Check for electrical continuity.
	c.) Open control circuit	c.) Open or shorted winding in transformer or reversing contactor coil; loose connection or broken wire in circuit; mechanical binding in contactor; open connection in control station. Check continuity and repair or replace malfunctioning parts
	d.) Wrong voltage or frequency	d.) The voltage and frequency must be the same as shown on hoist identification plate.
	e.) Low voltage	e.) Read voltage at the hoist terminal board while operating hoist in UP ↑ direction with full load. Reading should be as follows: UNIT RATING — MINIMUM VOLTAGE 230-3-60 — 207 460-3-60 — 414 Branch line overloaded. Install separate line to hoist or use proper wire size for branch line.
	f.) Brake not releasing	f.) Open or shorted coil winding; open wiring harness circuit. Check continuity and repair or replace defective part. Brake not properly adjusted. See page 11.
	g.) Excessive load/ Protector slipping	g.) Reduce loading to the capacity limit of the hoist as indicated on the identification plate and capacity insert.
2.) Hook moves in wrong direction	a.) Phase reversal	a.) See page 7.
3.) Hook lowers but will not raise	a.) Excessive load/ Protector slipping	a.) Reduce loading to the capacity limit of hoist as indicated on the identification plate and capacity insert.
	b.) Open hoisting circuit	b.) Open or malfunctioning parts in motor thermal switch. Switch automatically resets when motor has cooled sufficiently to resume operation (approximately one hour). Check continuity in the switch after motor has cooled and replace if it shows and open circuit. Open or shorted winding in reversing contactor coil; loose connection or broken wire in hoisting circuit; open connection in control station. Check continuity and repair or replace malfunctioning part. Check operation of adjustable screw limit switch (page 12).
	c.) Phase failure.	c.) See Item 1b.
	d.) Motor (hoist or trolley) over heated.	d.) Allow motor to cool for approximately one hour, then retest. See Item 8.
4.) Hook raises but will not lower	a.) Open lowering circuit	a.) Open or shorted winding in reversing contactor coil; loose connection or broken wire in lowering circuit; open connection in control station. Check continuity and repair or replace malfunctioning part. Check operation of adjustable screw limit switch (page 8).
5.) Hook lowers when hoisting control is operated	a.) Phase failure	a.) See Item 1b.

HOOSIER CRANE SERVICE COMPANY

TROUBLESHOOTING (CONT.)

ALL HOISTS		
PROBLEM	CAUSE MAY BE	REMEDY
6.) Hook does not stop promptly	a.) Brake slipping	a.) See Item 1b.
	b.) Excessive load	b.) Reduce loading to the capacity limit of hoist as indicated on the identification plate and capacity insert.
7.) Hoist operates sluggishly	a.) Excessive load	a.) See Item 6b.
	b.) Low Voltage	b.) See Item 1e.
	c.) Phase failure or unbalanced current in the phases	c.) See Item 1b.
	d.) Brake dragging	d.) See page 10.
8.) Motor overheats	a.) Excessive load	a.) See Item 6b.
	b.) Low voltage	b.) See Item 1e.
	c.) Extreme external heating	c.) Above and ambient temperature of 104°F., the frequency of hoist operation must be limited to avoid overheating of the motor. Special provisions should be made to ventilate the space or sheild the hoist from radiation.
	c.) Phase failure.	c.) See Item 1b.
	d.) Brake dragging	d.) See page 11.
9.) Hook fails to stop at either or both ends of travel	a.) Limit switch shaft not rotating	a.) Check for damaged limit switch gears and replace if damaged.
	b.) Traveling nuts not moving along shaft; guide plate loose; shaft or nut threads damaged.	b.) Tighten guide plate screws. Replace malfunctioning part.
	c.) Limit switches not opening circuit	c.) Check switch connections, electrical continuity and mechanical operation. Check the switch adjustment as described on page 11. Check for a pinched wire.
10.) Hook stopping point varies	a.) Limit switch not holding adjustment	a.) See Item 9b.
	b.) Brake not holding	b.) See page 11.
11.) Hoist will not operate at slow speed in either direction	a.) Open circuit	a.) Open or shorted motor winding, loose or broken wire in circuit. Speed selecting contactor stuck in oppostite speed mode. Replace motor, repair wire and/or repair speed selecting contactor.
	b.) Phase failure	b.) See Item 1b.
TWO SPEED HOIST		
12.) Hoist will not operate at fast speed in either direction	a.) Open circuit	a.) See Item 11a.
	b.) Open speed selecting-control circuit	b.) Open or shorted winding in speed selecting contactor coil. Loose connection or broken wire in circuit. Mechanical binding in contactor. Control station contacts not making or opening.
	c.) Phase failure	c.) See Item 1b.
13.) Hook will not raise at slow speed	a.) Excessive load/ Protector slipping	a.) See Item 6b.
	b.) Phase failure	b.) See Item 1b.
	c.) Open speed selecting-control circuit	c.) See Item 11a.
	d.) Brake not releasing	d.) See page 11.

HOUSTON CRANE SERVICE COMPANY

TROUBLESHOOTING (CONT.)

ALL HOISTS		
PROBLEM	CAUSE MAY BE	REMEDY
13.) Hook will not raise at slow speed	e.) Open hoisting circuit	e.) Open or defective motor thermal switch. Replace switch.
14.) Hook will not lower at slow speed	a.) Phase failure	a.) See Item 1b.
	b.) Open circuit	b.) See Item 11a.
	c.) Brake not releasing	b.) See page 11.
15.) Hook will not raise at fast speed		a.) See Items 13a, b, d, e & 11a.
16.) Hook will not lower at fast speed		d.) See Items 14a, c & 11a.
17.) Hook moves in proper direction at one speed-wrong direction at other speed	a.) Phase reversal	a.) Wiring reconnected improperly,. Interchange two leads at motor windings that are out of phase at the speed selecting contactor.
18.) *Motor overheats	a.) Fan failure	a.) Check the operation of the fans and replace them if necessary
	b.) Fan thermostat failure	b.) Check the thermostat setting and operation, Lower the setting or replace if necessary.
	c.) Blocked fan inlet or outlet	c.) Remove or clean foreign material from openings
MOTOR DRIVEN TROLLEY		
19.) Trolley does not operate in either direction	a.) No voltage at motor	a.) Open circuit; grounded or faulty connection in hoist wiring.
	b.) Phase failure.	b.) See Item 1b.
	c.) Open control circuit	c.) See Item 1c.
	d.) Low voltage	d.) See Item 1e.
	e.) Wrong voltage or frequency	b.) See Item 1d.
20.) Trolley operates in one direction only	a.) Open control circuit	a.) See Item 1c.
21.) Trolley operates sluggishly	a.) Excessive Load	a.) See Item 1g.
	b.) Low voltage	b.) See Item 1e.
	c.) Unbalanced current in the phases	c.) See Item 1b.
	d.) Brake dragging	c.) See page 13.
22.) Trolley motor overheats		a.) See Item 8.
*Applies to 7.2/2.5 motor and.or units with fans.		

HUDSON LANE SERVICE COMPANY

DISASSEMBLY AND ASSEMBLY INSTRUCTIONS

WARNING

The components (motor, gear housing, frame, etc) are heavy and an overhead lifting device and slings will be required to support, lift and lower the components during disassembly and reassembly. Remove any load and disconnect the hoist from the power supply before attempting to diassemble the unit.

CAUTION

The outboard bearings supporting the intermediate gears are located in gear housing cover, therfore, it should be carefully removed. It is suggested, in order to retain the gears in the gear housing, that the hoist be tipped slightly upward or positioned on end. Then carefully lift cover.

REMOVAL AND INSTALLATION OF LOAD CHAIN (1 & 2 PART REEVED UNITS)

Hoist load chain can be installed by one of the following methods. The first two methods do not require extensive hoist disassembly. The third method is recommended when replacing severly worn chain, and inspection and/or replacement of the liftwheel and chain guides are required.

METHOD 1

A. Disconnect hoist from power supply.

B. Remove shroud acess cover and disengage the limit switch guide plate from the traveling nuts. On double chain units without energy adsorption system, motor end cover must also be removed.

C. On double chain units, without energy absorption system, remove chain anchor from main frame by removing (from motor side) the chain anchor screw and drawing out chain anchor pin. Remove chain anchor from chain. On double chain units with energy absorption system, remove chain hanger pin located at base of energy absorption system. Remove hook block.

D. Using the procedures described on page 10 for cutting chians, cut a portion out of the second to last loose end link (upstanding) to form a coupling link. The portion removed should be centered on the weld and be 5/8" long. remove andy burrs from the cut edges on the coupling link. Discard last link.

E. Coupling link should be an upstanding link. Attach new chain to the old chain using the coupling link. First link of new chain should be a flat link. Be sure that upstanding links have welds away from liftwheel.

F. Re-energize power supply and then carefully operate hoist in a DOWN (↓) direction until approximately 2½ feet of new chain is hanging free on the loose end side. Make sure that the last chain link is a flat link. On double chain models the new chain must have an ODD number of links. Remove coupling link and old chain.

G. On single chain models, attach lower hook block. For double chain models operate hoist in the UP (↑) direction until approximately 6 to 8 feet of chain remains on the dead end side. Allow chain to hang free to remove twists. Using a wire as a starter, insert the chain into the hook block. The flat link enters the block first. The upstanding links should have the weld towards the hook sheave.

   On units without energy absorption system, insert anchor link (half link) in last link of chain and attach chain anchor. Position chain anchor in hoist frame and secure with anchor pin. BE SURE THERE IS NO TWIST BETWEEN HOOK BLOCK AND CHAIN ANCHOR. Lock anchor pin in position using screw and lockwasher. Be sure grounding wires are also re-attached under this locking screw. On units with energy absorption system, insert last link of chain into chain hanger. BE SURE THERE IS NO TWIST BETWEEN HOOK BLOCK AND CHAIN HANGER. REASSEMBLE CHAIN HANGER PIN.

H. Adjust limit switches as described on page 12.

METHOD 2:

A. Follow steps A, B, C of Method1. Also remove motor end cover on single chain units.

B. Re-energize power supply and carefully run the chain out of the hoist.

C. Disconnect hoist from power supply and disassemble electric brake from motor end bell (removal of studs is not necessary).

D. Feed a length of soft wire into loose end side of chain guide and push wire until it comes out the load side. Attach end of new chain to the wire (lose end side) so that welds on upstanding links are away from liftwheel. First link into hoist should be a flat link.

E. Rotate brake hub by hand and at the same time pull on wire to pull chain up into hoist and onto the liftwheel. Insert rods through the links just below the chain guide (both strands) to prevent chain from running out of the hoist while brake is reassembled.

F. Reassemble electric brake to motor end bell. Adjust brake as outlined on page 11.

G. Remove rods from chain links and complete installation of chain following steps F, G and H of Method 1.

METHOD 3

A. Follow steps A, B and C of Method 1. Also remove motor end cover and shroud.

B. Re-energize power supply and carefully run the chain out of the hoist.

C. Disconnect hoist from power supply and continue the disassembly of liftwheel, chain guides as outlined below. Inspect liftwheel and chain guides for wear. If these parts are worn or damaged they could cause premature wear of the new chain. If the liftwheel pockets, particularly the ends, are worn or scored excessively, replace the liftwheel. If the chain guides are worn or badly scored or cracked, they should also be replaced. The stripper should also be inspected and replaced if necessary.

D. Reassemble the hoist, reversing the disassembly procedure outlined below.

E. Install new chain and complete installation by following steps C, D, E, F and G of Method 2.

REMOVAL AND INSTALLATION OF LOAD CHAIN (3 & 4 PART REEVED UNITS)

It is recommended that when only the load chain is to be replaced, method 1 to be used. To use this method, engergize the hoist in the down direction until the lower limit switch stops the downward motion. Remove the chain container from the hoist. Remove the shroud access cover and disengage the limit switch guide plate from the traveling nuts.

HOOSIER CRANE SERVICE COMPANY

On the 3-part single reeved units, attach the coupling link to the loose end of the chain. The coupling link should be an upstanding link. Attach the new chain to the old chain so that the first link of the new chain is a flat link, and the upstanding links of the new chain have the welds away from the liftwheel. Remove the dead end pin from the hook block and remove the snubber block. Engergize the hoist in the down direction to feed the new chain up around the liftwheel, down around the hook block sheave, up around the idler hanger sheave and down to the hook block.

Continue to operate the hoist in the down direction until there are 8 to 12 links of new chain hanging free from the bottom of the chute. Remove the coupling link and attach the new chain to the hook block using the dead end pin, making sure there are no twists in the chain between the idler wheel hanger and the hook block. Re-install the snubber block, attach the chain container to the bottom of the hoist and re-adjust the limit switches.

On the 4-part single reeved units, attach the coupling link to the loose end of the chain. The coupling link should be a flat link. Attach the new chain to the old chain so that the first link of the new chain is an upstanding link with the welds of the upstanding links away from the liftwheel. Remove the snubber block. Remove the dead end pin from the dead end hanger assembly to release the spring container. Disassemble the spring container and disengage the dead end of the old chain from the half link. Engerize the hoist in the down direction to feed the new chain up and around the liftwheel, down around the first hook block sheave, up around the second hook block sheave. When one or two feet of new chain has exited from the second hook block sheave, stop the hoist. Install the half link in the dead end of the new chain and then assemble these in the spring container.

Engerize hoist in the down direction until there are 8 to 12 links of the new chain hanging free from the bottom of the chute. Attach the spring container to the dead end hanger assembly using the dead end pin, making sure there are no twists in the chain between the hook block and the spring container. Reinstall the snubber block, attach the chain container to the bottom of the hoist and re-adjust the limit switches.

REMOVAL AND INSTALLATION OF LOAD CHAIN (5 PART REEVED UNITS)

On the 5 part single reeved unit, attach the coupling link to the loose end of the chain. The coupling link should be a flat link. Attach the new chain to the old chain sot that the first link of the new chain is an upstanding link with the welds of all upstanding links away from the liftwheel. Remove the dead end pin from the hook block and remove the snubber block. Engerize the hoist in the down direction to feed the new chain up around the liftwheel, down around the first hook block sheave, up around the first idler hanger sheave, down around the second hook block sheave, up around the second idler sheave hanger and down around the second idler sheave hanger and down to the hook block.

Continue to operate the hoist in the down direction until there are 8 to 12 links of new chain hanging free from the bottom of the chute. Remove the coupling link and attach the new chain to the hook block using the dead end pin, making sure there are no twists in the chain between the idler wheel hanger and the hook block. re-install the snubber block, attach the chain container to the bottom of the hoist and RE-ADJUST the limit switches.

REPLACING MOTOR

The motor can be removed without completely disassembling the hoist by using the following procedure:

1. Disconnect hoist from power supply.
2. Insert rods or bolts in the load chain on both sides where it enters the chain guides. This will prevent movement of the chain when the motor is removed.
3. Drain approximately 3 quarts of gear oil and remove access cover (capacity insert) from gear cover.
4. Through the opening in the gear cover, remove the pinion retaining ring and motor pinion.

CAUTION: ***Do not allow parts to fall into gear case or complete disassembly of gear cover will be necessary to retrieve dropped parts.***

5. Remove motor cover and shroud, and disconnect motor and brake leads from contactor.
6. Disassemble and remove the electric brake assembly. Then remove the motor bolts and withdraw the motor.

NOTE: ***The motor pinion end of the rotor shaft has an oil seal surface that must not be damaged or nicked during the removal of the motor. Damaging the oil seal surface will allow the gear lubricant to seep into the motor.***

7. Remove and discard oil seal. If only motor is to be replaced, remove electric brake from old motor and install same (using studs supplied with new motor) on replacement motor. Install new motor. Bolt motor into postion. apply a thin film of lubricant from the gear housing to the new oil seal and then install the new oil seal. When installing the new oil seal, it must be postioned to a depth of 1/8 inch as measured from the face of the gear housing to the face of the oil seal. Make certain that the back or open side of the seal faces the gears (oil reservoir). Complete the installation by assembling motor pinion and pinion retaining ring to rotor shaft. Make certain that retaining ring is properly and thoroughly seated in rotor shaft groove. Install access cover and pour the drained oil back into the gear cover to bring oil to proper level. Remove rods or bolts holding the chain and adjust brake as described on page 11.

REPLACING LIFTWHEEL AND/OR CHAIN GUIDES

The liftwheel and chain guides of the hoist can be replaced or removed for inspection without complete disassembly of the unit by suing the following procedure.

1. Remove load chain as described on page 20 (Method 3).
2. Disconnect hoist from power supply.
3. Remove motor cover and shroud. Remove control panel.
4. Remove adjustable screw limit switch assembly.
5. Remove liftwheel bearing retainer. Loosen bolts attaching chain guide to frame.
6. Remove stripper screw. Insert this screw in the hole in the bottom of the stripper and withdraw stripper using the screw.
7. Insert a ½-13 UNC-2A bolt at least 2 inches long in the end of the liftwheel and using this bolt, withdraw the liftwheel and bearings. It may be necessary to use a puller to remove the liftwheel.
8. If chain guides are to be removed, remove bolts attaching chain guides to frame.

To re-install chain guides and/or liftwheel. reverse the above procedure. Be sure to coat the spline of the liftwheel with an EP grease.

The load chain can be installed by using the methods as described on page 20-21.

JERSEY CHAIN SERVICE COMPANY

PARTS LIST

ORDERING INSTRUCTIONS

The following information must accompany all correspondence or repair parts orders:

1. Hoist model number
2. Serial number of hoist and/or motor driven trolley.
3. Voltage, phase, hertz.

This information is stamped on the hoist nameplate. The motor driven trolley serial number is stamped one end of motor side frame.

When ordering hoist and/or trolley parts, give the motor nameplate data in addition to the above.

For parts orders specify:

1. Quantity desired.
2. Key number of part.
3. Part name.

NOTE: When ordering replacement parts, consider the need for such items as gaskets, oil seals, fasteners, etc. These items may be damaged or lost during the disassembly or may be unfit for future service because of deterioration feom age or service conditions.

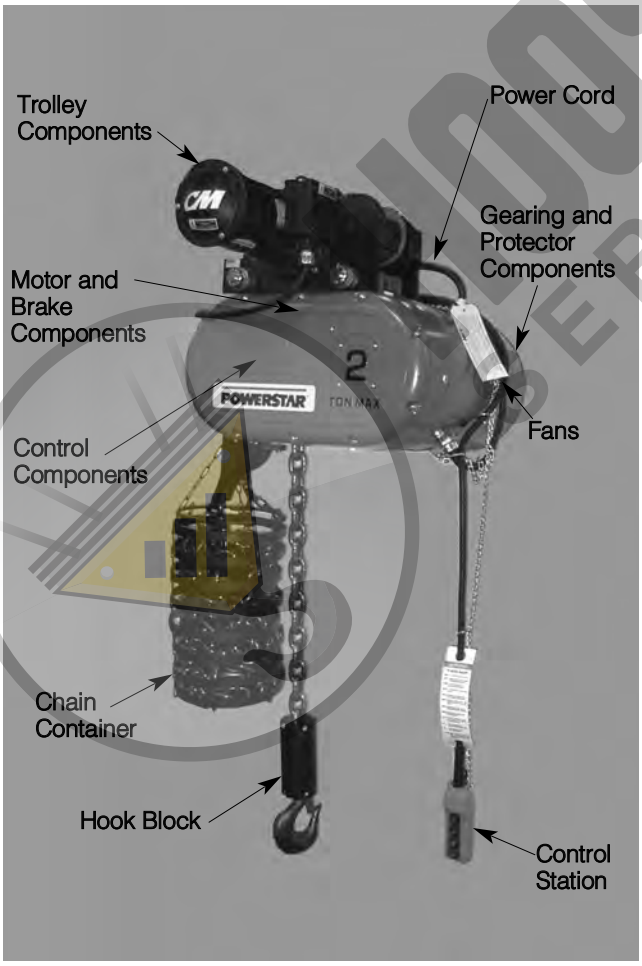

Figure 13. Parts Illustration Key

HOOSIER CRANE SERVICE COMPANY

PARTS LIST

Table 9. Parts List-Powerstar Electric Chain Hoist-2 thru 15 Ton

Key No.	Part Name	No. Req'd.	Models 2, 3, 4, 5, 6, 7½, 9, 10, 12 & 15 Ton
670-8	Warning Tag	1	81704
670-9	Series Label	1	70998
670-10	Access Cover	1	70080
670-11	Access Cover Gasket	1	70711
670-12	Access Cover Screw	4	987584
670-16	Brake Intermediate Plate	3	70054
670-17	Brake Friction Disc	4	70696
670-19	Brake Spring	3	70951
670-23	Motor (Includes 670-26, 670-28, 670-29, 670-31, 670-32 and 670-198)	1	71800 (5 hp., For Use on 230/460-3-60 Volt Units) 71801 (5 hp., For Use on 575-3-60 Volt Units) 71802 (1.67/5 hp.,For Use on 230-3-60 Volt Two Speed Units) 71803 (1.67/5 hp., For Use on 460-3-60 Volt Two Speed Units) 71804 (1.67/5 hp., For Use on 575-3-60 Volt Two Speed Units) 71805 (7.5 hp., For Use on 230/460-3-60 Volt Units) 71806 (7.5 hp., For Use on 575-3-60 Volt Units) 71810 (2.5/7.5 hp., For Use on 230-3-60 Volt Two Speed Units) 71811 (2.5/7.5 hp., For Use on 460-3-60 Volt Two Speed Units) 71812 (2.5/7.5 hp., For Use on 575-3-60 Volt Two Speed Units)
670-26	Motor End Bell with Brake Studs	1	70695
670-28	Motor Bearing - Brake End	1	82095
670-29	Motor Bearing - Main Frame End	1	80167
670-31	Motor Thru Bolts and Lockwashers	4	Order(4) each 83244 Bolts and (4) each 945851 Lockwasher
670-33	Motor Shaft Oil Seal	1	70725
670-34	Load Chain (Specify Length Required)	1	85794 (Phosphate) 85982 (Zinc Plated)
670-35	Control Cable (Specify Length Required)	1	82894 (#16-3 with Steel Strain Cable) 82895 (#16-7 with Steel Strain Cable)
670-37	Chain Guide Threaded	1	70044
670-38	Chain Guide - Plain	1	70039
670-41	Stripper	1	70354
670-42	Brake Hub Retainer Ring	1	45766
670-43	Brake Hub	1	70927
670-44	Intermediate Gear Retaining Ring	1	35779
670-45	Intermediate Gear	1	70017 (68 Teeth) 70071 (62 Teeth) 70068 (58 Teeth) 70070 (54 Teeth) 70016 (70 Teeth)
670-46	Second Reduction Pinion	1	70352
670-47	Second Reduction Pinion Bearing-Main Frame Side	1	88428
670-48	Second Reduction Pinion Bearing-Cover Side	1	88500
670-49	Chain Anchor Pin Screw, Washer	1	C802
670-50	Gear Cover	1	70003
670-51	Motor Cover	1	70004
670-52	Liftwheel Gear	1	70015 (For use on 2, 3, 4, 5 and 6 Ton Units) 70059 (For use on 7½, 9, 10, 12 and 15 Ton Units)
670-53	Bearing Retainer Screw - Gear Side	4	982748
670-54	Bearing Retainer - Gear Side	1	70705
670-55	Liftwheel Gear Retainer Ring	1	82676
670-56	Liftwheel Gear Bearing	1	83684
670-57	Bearing Oil Seal Retainer Gasket	1	70712
670-58	Bearing Oil Seal Retainer	1	70364
670-59	Bearing Oil Seal Retainer Screw	4	82747
670-60	Liftwheel Gear Oil Seal	1	70723
670-61	Liftwheel Gear Expansion Plug	1	989982
670-63	Liftwheel	1	70063
670-64	Liftwheel Bearing	1	83687

HOUSTON LINE SERVICE COMPANY

PARTS LIST, continued

Table 9. Parts List-Powerstar Electric Chain Hoist-2 thru 15 Ton			
Key No.	Part Name	No. Req'd.	Models 2, 3, 4, 5, 6, 7½, 9, 10, 12 & 15 Ton
670-65	Liftwheel Bearing Retainer Ring	1	82676
670-66	Bearing Retainer - Control Side	1	70704
670-67	Bearing Retainer Screw - Control Side	4	987579
670-68	Adjusting Access Cover Screw with Seal Washer	1	C803
670-69	Adjusting Access Cover	1	70361
670-70	Adjusting Access Cover Gasket	1	70710
670-71	Protector Adjusting Tool	1	70663
670-72	Liftwheel Pinion	1	70356 (For use on 2, 3, 4, 5 and 6 Ton Units) 70060 (For use on 7½, 9, 10, 12 and 15 Ton Units)
670-73	Liftwheel Pinion Bearing - Cover Side	1	88500 (For use on 2,3,4,5,6,7½,9,10,12 & 15 Ton Units)
670-74	Shaft Adapter	1	70368
670-75	Clutch Disc	2	70662
670-76	Disc Spring	2	70774
670-77	Second Reduction Gear Bushing	1	70776
670-78	Second Reduction Gear	1	70023
670-79	Adjusting Sprocket (Includes Pins)	1	C804
670-80	Protector (Includes Items 670-74 thru 670-79)	1	70664
670-81	Protector Retaining Ring	1	35779
670-82	Liftwheel Pinion Bearing - Main Frame Side	1	83681
670-83	Main Frame Assembly (Caution: Frame Components are assembled and then machined as a unit. Do Not arrempt to disassemble components.)	1	71664 (For use on 2, 3, 4, 5 and 6 Ton Units) 71600 (For use on 7½, 9, 10, 12 and 15 Ton Units)
670-84	Gear Cover Gasket	1	70709
670-85	Shroud Gasket	2	70713
670-86	Shroud Assembly (Includes Access Door & Screws)	1	71863 (Without Fan Cooling) 70836 (With Fan Cooling)
670-87	Shroud Stud	6	70721
670-88	Breather Vent	1	70726
670-89	Identification Plate and Attaching Screws	1	C805
670-90	Warning Label	1	26767
670-92	Gear Cover Screw and Seal	10	C806
670-93	Motor Cover Nut and Seal	6	C807
670-94	Locator Dowel	2	82353
670-95	Cover Plate	1	70814
670-96	Cover Plate Screw	2	987584
670-98	Access Door with Gasket Screws	1	Not available as a separate item, Order Shroud Assembly Key No. 670-86
670-100	Loose End Attachment (Includes Screw, Washer and Lockwasher	1	C808
670-101	Stripper Mounting Screw & Lockwasher	1	C809
670-102	Chain guide Mounting Screw and Lockwaher	5	C810
670-103	Oil Drain Plug	1	989053
670-104	Oil Level Plug	1	989053
670-105	Control Cable Clip (Specify Length Required)	A/R	20744
670-106	Control Station Chain (Specify Length Required)	A/R	621431
670-107	Motor Pinion Retainer Ring	1	35764
670-109	Motor Pinion	1	70386 (23 Teeth) 70387 (21 Teeth) 70432 (33 Teeth) 70439 (29 Teeth) 70440 (37 Teeth)
670-110	Hook Nut Pin	1	983887 (For use on 2 & 3 Ton Units) 983782 (For use on 4, 5 & 6 Ton Units with Latch Type Hook) 983787 (For use on 4 & 5 Ton Units with Latchlok Hook) 983602 (For use on 6 Ton Units with Latchlok Hook) 983762 (For use on 7½ Ton Units) 82465 (For use on 9 and 10 Ton (3-Part Reeved) Units) 82466 (For use on 10 and 12 Ton (4-Part Reeved) Units) 983131 (For use on 15 Ton Units)

HOOSIER CHAIN SERVICE COMPANY

PARTS LIST, continued

Table 9. Parts List-Powerstar Electric Chain Hoist-2 thru 15 Ton			
Key No.	Part Name	No. Req'd.	Models 2, 3, 4, 5, 6, 7½, 9, 10, 12 & 15 Ton
670-111	Hook Nut	1	45382 (For use on 2 & 3 Ton Units) 70418 (For use on 4, 5 & 6 Ton Units with Latch Type Hook) 70393 (For use on 4 & 5 Ton Units wiht Latchlok Hook) 70395 (For use on 6 Ton Units with Latchlok Hook) 70418 (For use on 7½ Ton Units) 70417 (For use on 9 & 10 Ton (3-Part Reeved) Units 82468 (For use on 10 & 12 Ton (4-Part Reeved) Units 70452 (For use on 15 Ton Units)
670-112	Hook Washer	1	45918 (For use on 2 & 3 Ton Units)
670-113	Limiter Ring	2	70370 (For use on 2 & 3 Ton Units)
670-114	Hook Block Disc Spring	33	70780 (For use on 2 & 3 Ton Units)
670-115	Hook Bearing	1	88506 (For use on 2 & 3 Ton Units) 88503 (For use on 4, 5 & 6 Ton Units with Latch Type Hook) 88507 (For use on 5 & 6 Ton units with Latchlok Type Hook) 88511 (For use on 7½, 9 & 10 Ton (3-Part Reeved) Units) 88513 (For use on 10 & 12 Ton (4-Part Reeved) Units) 88632 (For use on 15 Ton Units)
670-115A	Bearing Spacer	1	70097 (For use on 4, 5 & 6 Ton Units)
670-116	Lower Hook	1	70689 (For use on 2 & 3 Ton Units with Latch Type Hook) 70607 (For Use on 4, 5 & 6 Ton Units With Latch Type Hook) 70666 (For Use on 2 & 3 Ton Units with Latch Type Hook) 70667 (For use on 4 & 5 Ton Units with Latchlok Type Hook) 70691 (For Use on 6 Ton with Latchlok Type Hook) 70607 (For use on 7½ Ton Units with Latch Type Hooki) 70614 (For use on 9 & 10 Ton Units with Latch Type Hook) 70613 (For use on 10 & 12 Ton Units with Latch Type Hook) 70506 (For use on 15 Ton Units with Latch Type Hook)
670-117	Hook Block Screw (5/16" Dia.) and Nut	2	C811 (For Use on 2 & 3 Ton Units)
670-118	Hook Block Screw (3/8" Dia.) and Nut	2	C812 (For Use on 2 & 3 Ton Units)
670-119	Half Link	1	70018 (For use on 2,3,4,5,6, and 10 & 12 Ton (4 Part Reeved) Units)
670-120	Hook Block	2	70024 (For Use on 2 & 3 Ton Units) 70079 (For Use on 4, 5 & 6 Ton Units)
		1	70062 (For Use on 7½, 9 & 10 Ton (3-Part Reeved) Units-Right Hand Side)
		1	70067 (For Use on 7½, 9 & 10 Ton (3 Part Reeved) Units-Left Hand Side)
		2	70065 (For Use on 10 & 12 Ton (4-Part Reeved) Units)
		1	70504 (For Use on 15 Ton Units) - Right Hand Side
		1	70505 (For Use on 15 Ton Units) - Left Hand Side
670-120A	Capacity Inserts	2	46711 (For Use on 4 Ton Unit) 46712 (For Use on 5 Ton Unit) 46713 (For Use on 6 Ton Unit)
670-121	Chain Anchor	2	70007 (For Use on 4, 5 & 6 Ton Units)
670-122	Chain Anchor Pin	1	70365 (For Use on 4, 5, 6, 7½, 9, 10, 12 & 15 Ton Units)
670-123	Chain Anchor Screw	4	982670 (For Use on 4, 5 & 6 Ton Units)
670-124	Hook Block Sheave	1	70362 (For Use on 4, 5 & 6 Ton Units)
		1	70362 (For Use on 7½, 9 and 10 Ton (3-Part Reeved Units)
		2	70362 (For Use on 10, 12 & 15 Ton (4-Part Reeved Units)
670-125	Hook Block Sheave Bearing	2	83678 (For Use on 4 & 5 Ton Units) 83668 (For Use on 6 Ton Units)
		2	83668 (For Use on 7½, 9 & 10 Ton (3-Part Reeved Units)
		4	83668 (For Use on 10, 12 & 15 Ton (4-Part Reeved Units)
670-126	Hook Sleeve	1	45393 (For Use on 4, 5 & 6 Ton Units with 23/32" Lg. Shank Latchlok Type Hook) 45426 (For Use on 4 & 5 Ton Units with 1 3/16" Lg. Shank Latchlok Type Hook) 45427 (For Use on 6 Ton Units with 1 3/16" Lg. Shank Latchlok Type Hook)
		1	70419 (For Use on 7½ Ton (3-Part Reeved Units)
		1	70415 (For Use on 10 & 12 Ton (4-Part Reeved Units)

HOOSIER CRANE SERVICE INC. NY

PARTS LIST, continued

Table 9. Parts List-Powerstar Electric Chain Hoist-2 thru 15 Ton

Key No.	Part Name	No. Req'd.	Models 2, 3, 4, 5, 6, 7½, 9, 10, 12 & 15 Ton
670-127	Hook Block Screw and Nut	3	C813
		4	C836
		4	Furnish (1) **Screw** code 987160, (1) Nut code **948804** & (1) Lockwasher code **987924**
670-128	Control Cable Chain Clip	1	**57817** (For Use with #16-7 Cord and CSA Units)
670-129	Control Cable Chain Attaching Link (Specify Number Required)	A/R	**59883**
670-130	Control Panel	1	**70722**
670-131	Hoist Reversing Contactor Mounting Screw	2	**982686**
670-132	Terminal Board	1	**70708**
670-133	Terminal Board Mounting Screw	4	**982684**
670-134	Transformer	1	**70973** (230/460 Volt Primary with 115 Volt Split Secondary) **70975** (230/380/440-3-50/60 Volt Primary with 115 Volt/48Volt Split Secondary) **70974** (575 Volt Primary with 115 Volt Split Secondary) **70976** (208/220/415-3-50/60 Volt Primary with 115 Volt Split Secondary)
670-135	Transformer Mounting Screw	4	**982139**
670-136	Hoist Speed Selecting Contactor Mounting Screw	2	**982706**
670-137	Trolley Reversing Contactor Mounting Screw	2	**982683**
670-138	Jumpers (Specify Number Required and Identification Number Stamped on Wire Insulation or from Wiring Diagram)	A/R	**51533** (Black Jumper 4" Lg.) **51149** (Jumper #1: 14½" Lg.) **51148** (Jumper #2: 12½" Lg.) **51147** (Jumper #3: 13½" Lg.) **51146** (Jumper #4: 9¼" Lg.) **51144** (Jumper #5: 9 3/8" Lg.) **51145** (Jumper #6: 10" Lg.) **51561** Jumper Harness (Jumper #7) **51561** Jumper Harness (Jumper #8) **51687** (Jumper #9 15¼" Lg.) **51667** (Jumper #10: 14 3/8" Lg.) **51568** (Jumper #11: 10 3/4" Lg.) **51668** (Jumper #21: 8 ½" Lg.) **51689** (Jumper #22: 10" Lg.) **51702** (Jumper #23: 9" Lg.) **51704** (Jumper #24: 8 5/8" Lg.) **51151** (Jumper #34: 8½" Lg.) **51795** (Jumper #35: 5 1/8" Lg.) **51671** (Jumper #L1: 5 5/8" Lg.) **51657** (Jumper #L2: 4" Lg.) **51150** (Jumper #L3: 5" Lg.) **51143** (Jumper #T1, T2, T3: 5" Lg.) **51658** (Black Jumper: 2½" Lg.) **51695** (Jumper #B: 3 1/8" Lg.) **51694** (Jumper #B: 1 7/8" Lg.) **51629** (Jumper B1: 18¼" Lg.)
670-139	Line Connector	1	**982158**
670-140	Power Cable	1	**51437**
670-141	Power Cable Connector	1	**89767** (.600 to .750" Dia. Cords for 3/4" NPT Hole) **983979** (.500 to .625" Dia. Cords for 3/4 NPT Hole)
670-142	Control Panel Mounting Screw	2	**987579**
670-143	Control Panel Mounitng Screw	1	**25861**
670-144	Control Panel Mounting Screw Lockwasher & Flat Washer	1	Order (1) each **982226** Lockwasher & (1) each **954802** Washer
670-145	Plug - Main Frame (Not Shown)	1	**989052** (For ½" NPT Hole) **989055** (For 3/4" NPT Hole)

HOOSIER CRANE SERVICE COMPANY

PARTS LIST, continued

Table 9. Parts List-Powerstar Electric Chain Hoist-2 thru 15 Ton			
Key No.	Part Name	No. Req'd.	Models 2, 3, 4, 5, 6, 7½, 9, 10, 12 & 15 Ton
670-146	Control Cable Connector	1	83980 (.375 to .500" Dia. Cords for 3/4" NPT Hole) 983979 (.500 to .625" Dia. Cords for 3/4" NPT Hole) 89767 (.625 to .750" Dia. Cords for 3/4" NPT Hole)
670-147	Spring Container For Energy Absorption	1	70038
670-148	Spring Container Screw	2	C811
670-149	Spring Container Screw	2	C812
670-150	Chain Hanger Nut	1	958818
670-151	Chain Hanger Nut Pin	1	983748
670-152	Chain Hanger	1	70375
670-153	Chain Hanger Pin	1	C814
670-154	Guide Seat	1	70376
670-155	Pressure Plate	1	70057
670-156	Bearing Shield	2	70889 (For Use on 6 Ton Units Only)
		2	70889 (For Use on 7½, 9 & 10 Ton (3-Part Reeved Units)
		4	70889 (For Use on 10, 12 & 15 Ton (4-Part Reeved Units)
670-157	Spacer-Double Reduction Gearing (Not Shown)	1	70037
670-158	Intermediate Gear Bushing-Double Reduction Gearing	1	82027
670-159	Idler Gear-Double Reduction Gearing	1	70036
670-160	Adjustable Screw Limit Switch Assembly Complete, Specify Single or Double Reduction-See Page ?	1	70674 (For Use on 2, 3, 4, 5 & 6 Ton Units)
		1	70699 (For Use on 7½, 9, 10, 12 & 15 Ton Units)
670-162	Limit Switch Bracket Kit (Includes Bracket and Shaft Bushing)	1	27502
670-163	Limit Switch Kit (Includes Switch Assembly and Mounting Screws)	1	70674 (For Single reduction and For Use on 2, 3, 4, 5 & 6 Ton Units)
		1	Furnish (1) 27606 Limit Switch S/A & (1) 983614 Screw (For Double Reduction & For Use on 2,3,4,5 & 6 Ton Units)
		1	Furnish (1) 27605 Limit Switch S/A & (1) 983614 Screw (For Double Reduction & For Use on 7½,9,10,12 & 15 Ton Units)
670-167	Jumper	4	51682
670-168	Terminal Board	1	28719
670-169	Gear Train Bracket	1	70035
670-170	Drive Gear	1	70034
670-171	Limit Switch Drive Shaft and Snap Ring	1	C816 (For Double Reduction) 70674 (For single Reduction)
670-172	Limit Switch Shaft and Gear Kit (Includes Shaft, (2) Traveling Nuts, Gear Shaft, Spring, Shaft Washer, Guide Plate, 2 Screws and Single Reduction Idler Gear or Double Intermediate Gear	1	27561 (For Double Reduction) 70674 (For Single Reduction)
670-173	Jumper (14A)	1	51669
670-174	Jumper (20A)	1	51670
670-175	Gear Bushing	1	82033
670-176	Drive Shaft Bushing	1	82056
670-177	Idler Gear Bushing	1	82059
670-177A	Idler Gear Bushing Spacer	1	70037
670-178	Idler Gear Pin	1	983488 (Single & Double Reduction)
670-181	Terminal Board Screw	2	982718
670-182	Idler Gear Washer	1	983707 (Single & Double Reduction)
670-183	Drive Shaft Pin	1	983768
670-184	Drive Gear Pin	1	983766

HOUSER CRANE SERVICE COMPANY

PARTS LIST, continued

Table 9. Parts List-Powerstar Electric Chain Hoist-2 thru 15 Ton			
Key No.	Part Name	No. Req'd.	Models 2, 3, 4, 5, 6, 7½, 9, 10, 12 & 15 Ton
670-183	Drive Shaft Pin	1	983768
670-184	Drive Gear Pin	1	983766
670-185	Limit Switch Bracket Screw	2	987579
670-187	Limit Switch Locator Bushing	2	82031
670-188	Limit Switch Assembly Mounting Screw and Washer	2	C817
670-194	Hex Adjusting Nut	3	70403
670-195	Cap Plug - Main Frame	1	70809
670-196	Brake Hub Spacer	1	70400
670-197	Brake Instruction Label (Not Shown)	1	970984
670-198	Wave Type Loading Spring	1	83568
670-201	Frame Screen with Mounting Screws	1	C834 (Units With Fan Cooling) Order (1) each 71865 Cover & (4) each 981709 Screws (For Units Without Fan Cooling)
670-202	Thermostat with Spacers and Mounting Hardware	1	C835
670-203	Fan Wiring Harness	1	51543
670-204	Thermostat Wiring Harness	1	51544
670-205	Terminal Board woth Mounting Hardware	1	Order (1) each 28719 Terminal Board, (2) each 982718 Screw, (2) each 982650 Nut, (2) each 987929 Lockwasher and (1) each 70275 Insulator
670-206	Fan Screen	1	70835
670-207	Fan With Mounting Hardware	2	C831
670-208	Transformer and Mounting Hardware (575-3-60 and 380-3-50 units only)	1	For 220-380/3/50 Volt Units, Order (1) each 70828 Transformer, (4) each 987859 Screw, (4) each 987873 Lockwashers and (4) each 988141 Nuts. For 575-3-60 Units, Order (1) each 70887 Transformer, (4) each 987859 Screw, (4) each 987873 Lockwashers and (4) each 988141 Nuts.
670-209	Fan Power Wiring Harness	1	51545
670-211	Air Baffle & Mounting Screws	1	C833
670-212	Coil Housing Assembly (Contains Housing 670-194, 670-214, 670-215, 670-216, 670-218, 670-226, 670-246) See 670-247 if Cutout Switch is required.	1	70617
670-213	Components Board Assembly	1	Requires Individual Components 670-219, 670-220, 670-221, 670-222, 670-224 and 670-225
670-214	Coil Retainer	1	70941
670-215	Coil Retainer Screw	1	970980
670-216	Brake Nut Retainer Spring and Mounting Hardware (Includes Spring,Screw, Washer and Lockwasher)	3	C837
670-217	Brake Nut Spring	3	970978
670-218	Brake Nut Retaining Ring	3	970979
670-219	Components Board	1	70946 70500 (Units With Transformer Fan)
670-220	Resistor	1	70948
670-221	Resistor Insulator	4	70947
670-222	Resistor Mounting Hardware (Includes Screw, Lockwasher ans Nut)	1	C838
670-223	Cutout Switch Actuator Screw, Nut and Lockwasher (See 670-247 if Cutout Actuator is required)	1	C839
670-224	Rectifier/Varistor and Mounting Hardware (Includes Rectifier, Screw, Lockwasher and Nut)	1	C840
670-225	Jumper Kit (Includes 3 Jumpers, 2 Screws, 2 Lockwashers and 2 Nuts)	1	C841
670-226	Brake Coil	1	70697
670-227	Idler Wheel Hanger	1	70416 (For use on 7½, 9, 10 and 12 Ton Units)
		2	70416 (For Use on 15 Ton Units)

HOOSIER CRANE SERVICE COMPANY

PARTS LIST, continued

Table 9. Parts List-Powerstar Electric Chain Hoist-2 thru 15 Ton			
Key No.	Part Name	No. Req'd.	Models 2, 3, 4, 5, 6, 7½, 9, 10, 12 & 15 Ton
670-228	Bearing Sheild (Idler Wheel Hanger)	2	70889 (For Use on 7½. 9. 10 and 12 Ton Units)
		4	70889 (For Use on 15 Ton Units)
670-229	Bearing (Idler Wheel Hanger)	2	83668 (For Use on 7½, 9, 10 and 12 Ton Units)
		4	83668 (For Use on 15 Ton Units)
670-230	Sheave (Idler Wheel Hanger)	1	70362 (For Use on 7½, 9, 10 and 12 Ton Units)
		2	70362 (For Use on 15 Ton Units)
670-231	Bearing Cup (Idler Wheel Hanger)	1	70434 (For Use on 7½, 9, 10 and 12 Ton Units)
		2	70434 (For Use on 15 Ton Units)
670-232	Bearing Cap Screw and Lockwasher	3	C842 (For Use on 7½, 9, 10 and 12 Ton Units)
		6	C842 (For Use on 15 Ton Units)
670-233	Hanger Attaching Screw	1	82463 (For Use on 7½ Ton Units)
670-234	Latch Kit	1	45664 (For use on 2 & 3 Ton Units)
		1	45697 (For use on 4 Thru 7½ Ton Units)
		1	71913 (For Use on 9, 10 and 12 Ton Units)
		1	70278 (For Use on 15 Ton Units)
670-235	Snubber Block	2	70304 (For Use on 7½, 9, and 10 Ton (3-Part Reeved Units)
		2	70305 (For Use on 10 and 12 Ton (4-Part Reeved Units)
		2	70277 (For Use on 15 Ton Units)
670-236	Snubber Block Spacer	6	70422 (For Use on 7½, 9, 10 and 12 Ton Units)
		10	70422 (For Use on 15 Ton Units)
670-237	Snubber Block Hardware Kit	6	C843 (For Use on 7½, 9, 10 and 12 Ton Units)
		10	C843 (For Use on 15 Ton Units)
670-238	Hook Capacity Label	2	71901 (For Use on 7½ Ton Units)
		2	71900 (For Use on 9 Ton Units)
		2	71902 (For Use on 10 Ton Units)
		2	71903 (For Use on 12 Ton Units)
		2	70282 (For Use on 15 Ton Units)
670-239	Suspension Bolt (Idler Wheel Hanger)	1	70430 (For Use on 7½ Ton Units)
		1	70435 (For Use on 9 and 10 Ton (3-Part Reeved Units)
		1	70438 (For Use on 10 and 12 Ton (4-Part Reeved Units)
		2	70438 (For Use on 15 Ton Units)
670-240	Suspension Bolt Nut (Idler Wheel Hanger)	2	82464 (For Use on 7½, 9, 10 and 12 Ton Units)
		4	82464 (For Use on 15 Ton Units)
670-241	Suspension Bolt Cotter Pin (Idler Wheel Hanger)	2	988384 (For Use on 7½, 9, 10 and 12 Ton Units)
		4	988384 (For Use on 15 Ton Units)
670-242	Spacer Washers	A/R	988007 (For Use on 7½, 9, 10, 12 and 15 Ton Units)
670-243	Trackwheel Clamp Screw	4	82469 (For Use on 7½, 9, 10, 12 and 15 Ton Units)
670-244	Trackwheel Clamp Screw Washer	4	70414 (For Use on 7½, 9, 10, 12 and 15 Ton Units)
670-245	Trackwheel Clam Screw Washer Pin	4	940968 (For Use on 7½, 9, 10, 12 and 15 Ton Units)
670-246	Coil Retainer Wave Spring	1	Order (1) each 70261 Washer and (1) each 70276 Cushion
670-247	Cutout Switch and Mounting Hardware (Includes Switch, 2 Spacers, 2 Screws, 2 Lockwashers and Insulator) See 670-223 for Actuator hardware if required	1	C845
670-256	Control Station (See page ?)	1	
670-258	Coil Insulating Washer	1	70261
670-259	Coil Retainer Cushion	1	70261
670-300	Control Station Chain Attaching Link (Specify Number Required)	---	59883
670-301	Control Station Chain (Specify Length Required)	---	621431
670-302	Control Station Cord Clip (Specify Number Required)	---	20744
670-303	Contactor Jumper	3	51661

HOOSIER CRANE SERVICE COMPANY

PARTS LIST, continued

Table 9. Parts List-Powerstar Electric Chain Hoist-2 thru 15 Ton			
Key No.	Part Name	No. Req'd.	Models 2, 3, 4, 5, 6, 7½, 9, 10, 12 & 15 Ton
670-304	Hoist Suspension Bolt	2	**58503** (For Use on 2 Ton Unit For 3.33" thru 5.50" Flg.) **59350** (For Use on 2 Ton Unit For 5.50" thru 7.62" Flg.) **59353** (For Use on 3 to 6 Ton Unit 3.25" thru 4.62" Flg.) **70384** (For Use on 3 to 6 Ton Unit 5.00" thru 6.25" Flg.) **70429** (For Use on 3 to 6 Ton Unit 6.37" thru 7.62" Flg.) **46394** (For Use on 2 to 6 Ton with Lug Suspension) **70420** (For Use on 7½ Ton Unit 5.50" thru 7.50" Flg.) **70428** (For Use on 9 & 10 Ton Units (3-Part Reeved) For 6.00" thru 8.00" Flg.) **70429** (For Use on 10, 12 & 15 Ton Unit 7.00" thru 9.00" Flg.)
670-305	Hoist Suspension Bolt Nut	4	**958818** (For Use on 2, 3, 4, 5, 6, 9 & 10 (3 Part Reeved) and 15 Ton Units)
		6	- - -
670-306	Intermediate Pinion Nut Lockwasher	4	**988368** (For Use on 2, 3, 4, 5, 6, 9 & 10 (3 Part Reeved) and 15 Ton Unit)
		6	- - -
670-307	Spacer Washers (Specify Number Required)	A/R	**958726**
670-308	Trackwheel with Bearing Cups	4	2 Ton Unit, Order Code **58162** 3 Thru 6 Ton Unit, Order Code **58163** 3 Thru 6 Ton Units For 3.25" Flg. Order Code **58164**
670-309	Trackwheel Bearing Cup	8	2 Ton Unit, Order Code **88521** 3 Thru 6 Ton Unit, Order Code **88556**
670-310	Trackwheel Bearing Cone	8	2 Ton Unit, Order Code **88525** 3 Thru 6 Ton Unit, Order code **88545**
670-311	Trackwheel Bearing Seal Washer	8	2 Ton Unit, Order Code **68918** 3 Thru 6 Ton Unit, Order Code **68917**
670-312	Trackwheel Stud	4	2 ton Unit, Order Code **58459** 3 Thru 6 ton Unit, Order code **70382**
670-313	Trackwheel Stud Collar	4	2 Ton Unit, Order Code **58484** (37/64" Lg.)
670-314	Trackwheel STud Nut	4	2 Ton Unit, Order Code **982613** 3 Thru 6 Ton Units, Order code **988192**
670-315	Trackwheel Gear	2	**58548** (For Use on 2 Ton Geared & MDT: 34 Teeth) **58588** (For Use on 3 Thru 6 Ton Geared, 50 & 75 FPM MDT: 62 Teeth) **58549** (For Use on 3 Ton Geared and 65 FPM MDT: 43 Teeth) **58549** (For Use on 3 Thru 6 Ton Special Speed MDT: 43 Teeth)
670-316	Trackwheel Gear Pin	4	**983503**
670-317	Trackwheel Gear Pinion	1	**58505** (For Use on 2 Ton Geared & MDT: 24 Teeth) **58505** (For Use on 3 Thru 6 Ton Geared, 35 FPM MDT : 24 Teeth) **58505** (For Use on 3 Ton Geared and 65 FPM MDT: 24 Teeth) **58589** (For Use on 3 Thru 6 Ton Geared & 50 FPM MDT & Special Speed MDT)
670-318	Trackwheel Pinion Key	1	**85546**
670-319	Geared Side Frame (Does Not Include Wheels)	1	**59615** (For Use on 2 Ton Unit with 3.33" Thru 5.50" Flg.) **59613** (For Use on 2 Ton Unit with 3.33" Thru 5.50" Flg. with Idler Pinion Studs) **58618** (For Use on 2 Ton Unit with 5.50" Thru 7.62 Flg.) **70683** (For Use on 3 Thru 6 Ton Units with 5.00" Thru 6.25" Flg.) **57631** (For Use on 3 Thru 6 Ton Units with 6.38" Thru 7.62" Flg.) **57629** (For Use on 3 Thru 6 Ton Units with 6.38" Thru 7.62" Flg. With Idler Pinion Studs) **58191** (For Use on 3 Thru 6 Ton Units with 3.25" Flg.) **58622** (For Use on 3 Thru 6 Ton Units with 4.00" Thru 4.62" Flg.) **58623** (For Use on 3 Thru 6 Ton Units with 4.00" Thru 4.62" Flg. with Idler Pinion Studs)
670-320	Plain Side Frame (Does Not Include Wheels), 1 Req'd. For Geared & Motor Driven Trolleys, 2 Req'd. for Plain Trolley	A/R	**59614** (For Use on 2 Ton Unit with 3.33" Thru 5.50" Flg.) **58617** (For Use on 2 Ton Unit with 5.50" Thru 7.62" Flg.) **70682** (For Use on 3 Thru 6 Ton Units with 5.00" Thru 6.25" Flg.) **57630** (For Use on 3 Thru 6 Ton Units with 6.38" Thru 7.62" Flg.) **58190** (For Use on 3 Thru 6 Ton Units with 3.25" Flg.) **58621** (For Use on 3 Thru 6 Ton Units with 4.00" Thru 4.62" Flg.)

HOOSIER DRIVE SERVICE COMPANY

PARTS LIST, continued

Table 9. Parts List-Powerstar Electric Chain Hoist-2 thru 15 Ton			
Key No.	Part Name	No. Req'd.	Models 2, 3, 4, 5, 6, 7½, 9, 10, 12 & 15 Ton
670-321	Handwheel Bracket With Bushing	1	59616
670-322	Handwheel Bushing	2	58727
670-323	Handwheel Bracket Screw Lockwasher	3	945853
670-324	Handwheel Bracket Screw	3	987061
670-325	Handwheel Shaft	1	58504
670-326	Hand Chain Wheel Key	1	59967
670-327	Hand Chain Wheel	1	33143
670-328	Trackwheel Pinion or Handwheel Shaft Nut Lockwasher	1 or 2	2 Thru 6 Ton Motor Driven Trolley, Order (1) each code 86270 All Geared Trolleys, Order (2) each Code 986270
670-329	Trackwheel Pinion or Handwheel Shaft Nut	1 or 2	2 Thru 6 Ton Motor Driven Trolley, Order (1) each code 988095 All Geared Trolleys, Order (2) each Code 988095
670-330	Hand Chain Guide	1	58152
670-331	Chain Guide Screw	1	987065
670-332	Chain Guide Screw Washer	1	986224
670-333	Chain Guide Screw Nut Lockwasher	1	945853
670-334	Chain Guide Screw Nut	1	945822
670-335	Hand Chain and Connecting Link (Specify Length Required)	A/R	619022
670-336	Hand Chain Connecting Link	1	945491
670-337	Trackwheel Pinion Spacer Washer	A/R	987963
670-338	Trackwheel Pinion Shaft	1	58450
670-339	Trackwheel Pinion Spacer	2	58456
670-341	Pinion Shaft Ball Bearing	2	88438
670-342	Intermediate Shaft Ball Bearing (Side Frame End)	1	88437
670-343	Intermediate Shaft Ball Bearing (Motor End)	1	88436
670-344	Driven Gear	1	58451
670-345	Intermediate Pinion	1	58452
670-346	Intermediate Gear	1	58453 (All Models except 2 Ton 50 & 100 FPM Units) 58407 (2 Ton 50 & 100 FPM Units)
670-347	Motor Pinion	1	54356 (All Models except 2 Ton 50 & 100 FPM Units) 58406 (2 Ton 50 & 100 FPM Units)
670-348	Motor Pinion Key	1	988263
670-349	Driven Gear Key	1	89031
670-350	Pinion Bearing Spacer	2	58456
670-351	Intermediate Bearing Spacer	1	58728
670-352	Intermediate Pinion Nut	1	988230
670-353	Intermediate Pinion Nut Lockwasher	1	986266
670-354	Gear Housing	1	70064
670-355	Gear Housing Gasket	1	58729
670-356	Gear Housing Screw	4	987019
670-357	Gear Housing Screw Lockwasher	4	945851
670-358	Motor End Bell Gasket	1	58730
670-359	Brake Hub	1	59363
670-360	Brake Hub Snap Ring	1	27766
670-361	Brake Attaching Screw	2	982708
670-362	Brake Attaching Screw Lockwasher	2	982226
670-363	Motor End Coverand Brake Cover Gasket	2	68756
670-364	Brake Cover	1	58161
670-365	Brake Cover Screw	3	968756
670-366	Brake Cover Screw Sealing Washer	3	982251
670-367	Motorn End Cover	1	68751

HOOSIER CRANE SERVICE COMPANY

PARTS LIST, continued

Table 9. Parts List-Powerstar Electric Chain Hoist-2 thru 15 Ton			
Key No.	Part Name	No. Req'd.	Models 2, 3, 4, 5, 6, 7½, 9, 10, 12 & 15 Ton
670-368	Motor End Cover Screw	3	982688
670-369	Motor End Cover Screw Sealing Washer	3	982251
670-370	Terminal Box, Cover and Gasket	1	58120
670-371	Trackwheel Screw	4	982687 (For Use on 7½, 9, 10, 12 and 15 Ton Geared and Motor Driven Trolleys)
670-372	Terminal Board	1	68837
670-373	Terminal Box Attaching Screw	1	927930
670-374	Terminal Box Attaching Screw Lockwasher	1	982226
670-375	Terminal Board Spacer	2	68776
670-376	Terminal Box and Board Attaching Screw	2	982695
670-377	Terminal Box and Board Attaching Screw Lockwasher	2	986290
670-378	Power Cable Connector	1	89926 (Used on .500" to .625 Dia. Cords for ½" NPT Hole)
670-379	Power Cable	1	51459
670-380	Junction Box Gasket	1	59991
670-381	Contactor Box, Cover with Gaskets & Screws	1	70877
670-382	Contactor Box Attaching Screw	3	927930
670-383	Contactor Box Attaching Screw Lockwasher	3	982226
670-385A	Combination Power and Control Cord	A/R	89615 (Specify Length Required)
670-387	Contactor Attaching Screw	3	982683
670-388	Contactor Attaching Screw Lockwasher	3	957844
670-390	Transformer	1	68661 (230/460-3-60 Volt Primary with 115 Volt Secondary)
670-391	Transformer Attaching Screw	2	927930
670-392	Transformer Attaching Screw Lockwasher	2	982226
670-395	Control Station Cord Connector, O-Ring and Locknut	1	983979 Connector (For .500" to .625 Dia. Cords for 3/4" NPT Hole) 983963 O-Ring (For 3/4" NPT Connector) 989772 Locknut (For 3/4" NPT)
670-396	Combination Power and Control Cord Connector, O-Ring and Locknut	1	983979 Connector (For .5800" to .625" Dia. Cords for 3/4" NPT Hole) 89767 Connector (For .625" to .750" Dia. Cords for 3/4" NPT Hole) 983963 O-Ring (For 3/4" NPT Connector) 989772 Locknut (For 3/4" NPT)
670-397	Control Station Cable Connector	4	982158
670-398	Transformer Lead Connector (460 Volt Unit Only)	1	982158
670-399	Control Station Chain Eyebolt	1	27850
670-400	Control Station Chain Eyebolt Washer	2	Order (2) each 954802 Washer
670-400A	Control Station Chain Eyebolt Lockwasher	1	Order (1) each 982226 Lockwasher
670-401	Control Station Chain Eyebolt Nut	2	982514
670-402	Ground Screw	A/R	982666
670-403	Ground Screw Lockwasher	A/R	977873
670-405	Motor Lead Connector (1 Req'd. for 230 Volt Units, (3) Req'd. for 460 Volt Units)	A/R	983812
670-406	Trolley Reversing Contactor for Separate MDT (See page ?)	1	27885 (120 Volt Coil) 36753 (48 Volt with 50 Hz. Coil) 36754 (48 Volt with 60 Hz. Coil)
670-407	Trolley Motor	1	57766 (½ hp. 600 rpm: 230-460/3/60 Volt) 57782 (½ hp 600 rpm: 575-3-60 Volt) 68916 (½ hp. 1200 rpm: 230-460/3/60 Volt) 57771 (½ hp. 1200 rpm: 575-3-60 Volt) 57989 (3/4 hp. 1800 rpm: 230-460/3/60 Volt) 57280 (3/4 hp. 1200 rpm: 230-460/3/60 Volt) 57997 (3/4 hp. 1800 rpm: 575-3-60 Volt) 57778 (.25/.50 hp. 900/1800 rpm: 230-3-60 Volt) 57273 (.25/.50 hp. 600/1200 rpm: 230-3-60 Volt) 57779 (.25/.50 hp. 900/1800 rpm: 460-3-60 Volt) 57274 (.25/.50 hp. 600/1200 rpm: 460-3-60 Volt) 57783 (.25/.50 hp. 900/1800 rpm: 575-3-60 Volt) 57998 (.375/.75 hp. 900/1800 rpm: 230-3-60 Volt) 70982 (.375/.75 hp. 900/1800 rpm: 460-3-60 Volt) 57999 (.375/.75 hp. 900/1800 rpm: 575-3-60 Volt)

HOOSIER CRANE SERVICE COMPANY

PARTS LIST, continued

Table 9. Parts List-Powerstar Electric Chain Hoist-2 thru 15 Ton			
Key No.	Part Name	No. Req'd.	Models 2, 3, 4, 5, 6, 7½, 9, 10, 12 & 15 Ton
670-419	Trolley Motor Brake (Items 670-359 thru 670-366 and 670-420)	1	6321 (For Use on 230-460/3/60 Volt Single Speed or 230-3-60 Volt Two Speed Units) 6322 (For Use on 460-3-60 Volt Two Speed Units) 5974 (For Use on 575-3-60 Volt Units) 6325 (For Use on Weatherproofed 230-460/3/60 Volt Single Speed or 230-3-60 Volt Two Speed Units) 6326 (For Use on Weatherproofed 460-3-60 Volt Two Speed Units)
670-420	Electric Brake (Items 670-421 thru 670-423 and 670-425 thru 670-431)	1	59692 (For Use on Single 230-460/3/60 Volt or Two Speed 230-3-60 Volt Units) 59694 (For Use on Two Speed 460-3-60 Volt Units) 59693 (For Use on 575-3-60 Volt Units)
670-421	Brake Base Plate with Studs	1	28668
670-422	Brake Friction Disc	1	27677
670-423	Brake Armature with Plate	1	28678
670-425	Brake Coil	1	51518 (For Use on Single Speed 230/460-3-60 Units and 2-Speed 230-3-60 Volt Units. 51519 (For Use on Two Speed 460-3-60 Volt Units) 51520 (For Use on 575-3-60 Volt Units)
670-426	Brake Coil Retainer Strap	1	57753
670-427	Brake Field with Plate and Shading Coils	1	28677
670-428	Brake Spring	2	68750
670-429	Brake Spacer Washer	10	954807
670-430	Brake Stud Nut	2	945840
670-431	Shading Coil	2	54831
670-433	Brake Lead Wire Connector	2	983812
670-443	Trackwheel Pinio Shaft Snap Ring	2	27790 (For Use on 7½, 9. 10, 12 and 15 Ton Units)
670-444	Idler Pinion	2	70411 (For Use on 7½, 9. 10, 12 and 15 Ton Units)
670-445	Idler Bushing	2	70066 (For Use on 7½, 9. 10, 12 and 15 Ton Units)
670-446	Thrust Bushing	2	82061 (For Use on 7½, 9. 10, 12 and 15 Ton Units)
670-447	Idler Pinion Retaining Ring	2	68785 (For Use on 7½, 9. 10, 12 and 15 Ton Units)
670-448	Dead End Hanger Assembly	1	70606 (For Use on 7½, 9. 10, 12 and 15 Ton Units)
670-449	Dead End Pin	1	C814 (For Use on 7½, 9. and 10 Ton (3-Part Reeved Units)
		1	70421 (For Use on 10, and 12 Ton (4-Part Reeved Units)
		1	C814 (For Use on 15 Ton Units)
670-450	Dead End Pin Cotter Pin	1	C814 (For Use on 7½, 9. and 10 Ton (3-Part Reeved Units)
		1	988367 (For Use on 10, and 12 Ton (4-Part Reeved Units)
		1	C814 (For Use on 15 Ton Units)
670-451	Capacity Label Trolley	1	957928 (For Use on 2 Ton Units)
		1	52761 (For Use on 3 Ton Units)
		1	52761 (For Use on 5 Ton Units)
		1	52761 (For Use on 6 Ton Units)
		1	971908 (For Use on 7½ Ton Units)
		1	971907 (For Use on 9 Ton Units)
		1	971906 (For Use on 10 Ton Units)
		1	971909 (For Use on 12 Ton Units)
		1	70282 (For Use on 15 Ton Units)
670-452	Warning Label - Trolley (All Trolley)	1	936984
670-453	CM Cover Label-Trolley (All Motor Driven Trolleys)	1	25779
670-454	Dead End Bolt, Nut and Lockwasher	2	Furnish (1) each 987103 Bolt, (1) each 982521 Nut and (1) each 987921

HOOSIER CRANE SERVICE COMPANY

PARTS LIST, continued

Table 9. Parts List-Powerstar Electric Chain Hoist-2 thru 15 Ton			
Key No.	Part Name	No. Req'd.	Models 2, 3, 4, 5, 6, 7½, 9, 10, 12 & 15 Ton
670-455	Clover Leaf Chain Plate	1	70447 (For Use on 15 Ton Units)
670-456	Dead End Support	1	70448 (For Use on 15 Ton Units)
670-457	Hook Block spacer	4	70449 (For Use on 15 Ton Units)
670-458	Clover Leaf Chain Guide Attaching Screws	6	987727 (For Use on 15 Ton Units)
670-459	Trunnion	1	70451 (For Use on 15 Ton Units)
670-460	Warning Plate-Hook Block	1	70283 (For Use on 15 Ton Units)
670-461	Instruction Label-(All Motor Driven Trolleys with Trolley Brake	1	968987
670-500	Hoist Reversing Contactor, (Individual Components not available for repair of this Contactor.	1	52903 (115 Volt Coil)
670-501	Hoist Speed Selecting Contactor, (Individual Components are not available for the repair of this Contactor.	1	70805 (115 Volt Coil)
670-502	Trolley Reversing Contactor, Complete with Terminal and Coil Jumpers	1	C818
670-503	Din-Rail	1	29375
670-504	End Clamp	1	00000396
670-547	Anti-tipping Wheel with Nut and Lockwasher	1	C847 (For Use on 7½, 9, 10, 12 and 15 Ton Units)
670-548	Chute Mounting Screw, Lockwasher and Nut	1	C848 (For Use on 7½, 9, 10, 12 and 15 Ton Units)
670-549	Chain container Screw, Washers, Lockwashers and Nut	1	C849 (For Use on 7½, 9, 10, 12 and 15 Ton Units)
670-550	Chain container	1	70671 (For Use on 1 Part Reeving for 20' Lift) 70672 (For Use on 1 Part Reeving for 20' to 40' Lift or 2 Part Reeving for 20' Lift.) 70692 (For Use on 1 Part Reeving for 40' to 60' Lift or 2 Part Reeving for 20' to 30' Lift) 70693 (For Use on 1 Part Reeving for 60' to 86" Lift or 2 Part Reeving for 30' to 43' Lift) 70627 (For Use on 3-Part Reeving for 20' Lift) 70628 (For Use on 4-Part Reeving for 20' Lift) 70509 (For Use On 5-Part Reeving for 20' Lift)
670-551	Chain Chute	1	70033
670-552	Chute and Container Screw and Washer (2)	1	C825
670-553	Chute Mounting Screw and Washer	1	C826
670-554	Container Mounting Screw and Nut	1	C827
670-556	Bracket Mounting Screw, Washer and Lockwashers	1	C846 (For Use on 7½, 9, 10, 12 and 15 Ton Units)
670-557	Bracket	1	70244 (For Use on 7½, 9, 10, 12 and 15 Ton Units)

HOOSIER CRANE SERVICE COMPANY

POWERSTAR HOIST SINGLE SPEED CONTROL STATION

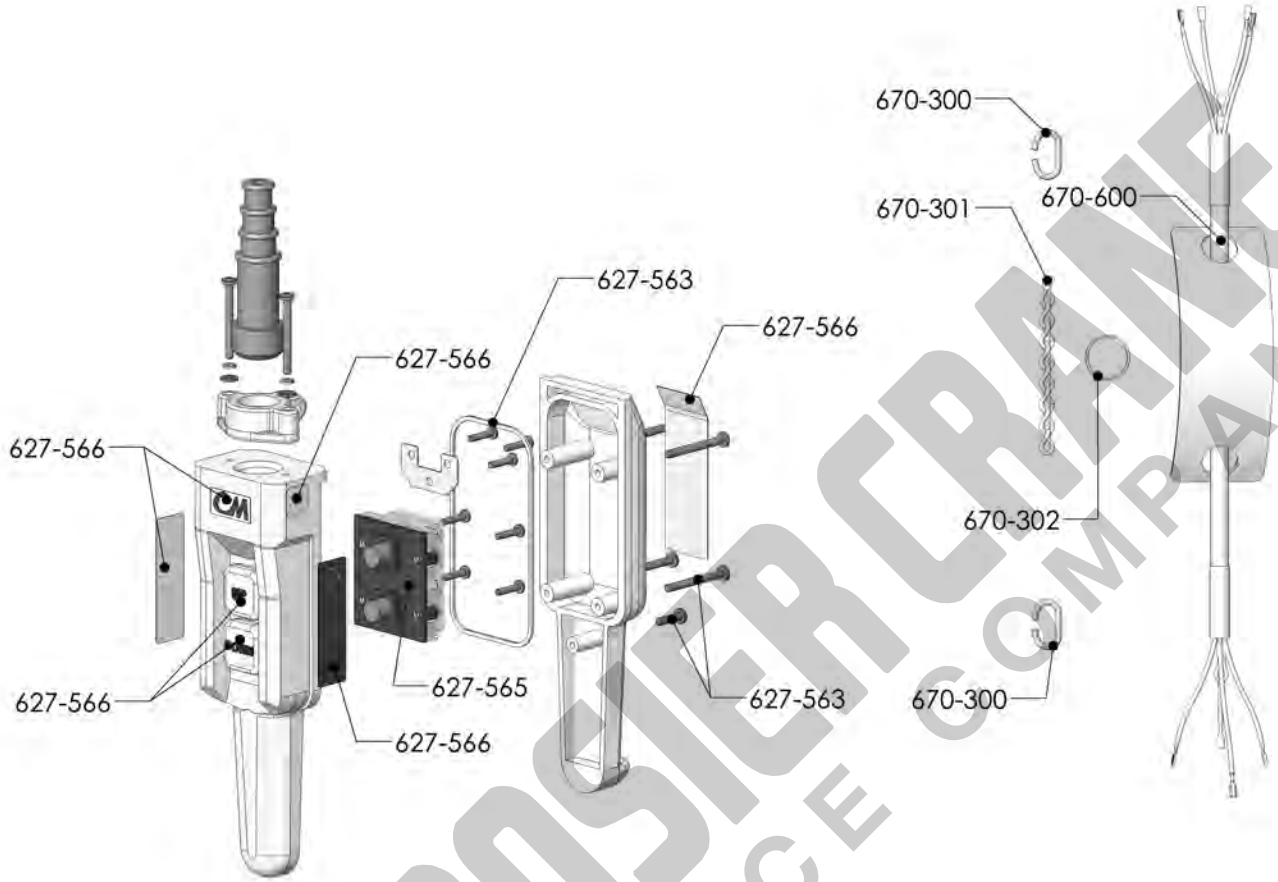

Figure 14.

Single Speed Hoist Control Station			
Key Number	**Part Name**	**No. Req'd**	**Part Number**
670-300	Control Station Chain Attaching Link (Specify Number Required)	-	59883
670-301	Control Station Chain (Specify Length Required)	-	621431
670-302	Control Station Cord Clip (Specify Number Required)	-	20744
627-551	Control Station Grommet	1	58278
627-552	Control Station (Includes 627-551 thru 627-567)	1	58272
627-563	Control Station Hardware Kit w/gasket	1	58275
627-565	Control Station 1-speed Insert	1	58255
627-566	Control Station Warning Label Kit (Includes Exterior Labels)	1	58276
627-567	Contol Station Button Label Kit	1	58277
670-600	Standard Control Cord Assembly	1	Contact Factory

HOOSIER CRANE SERVICE COMPANY

POWERSTAR HOIST TWO SPEED CONTROL STATION

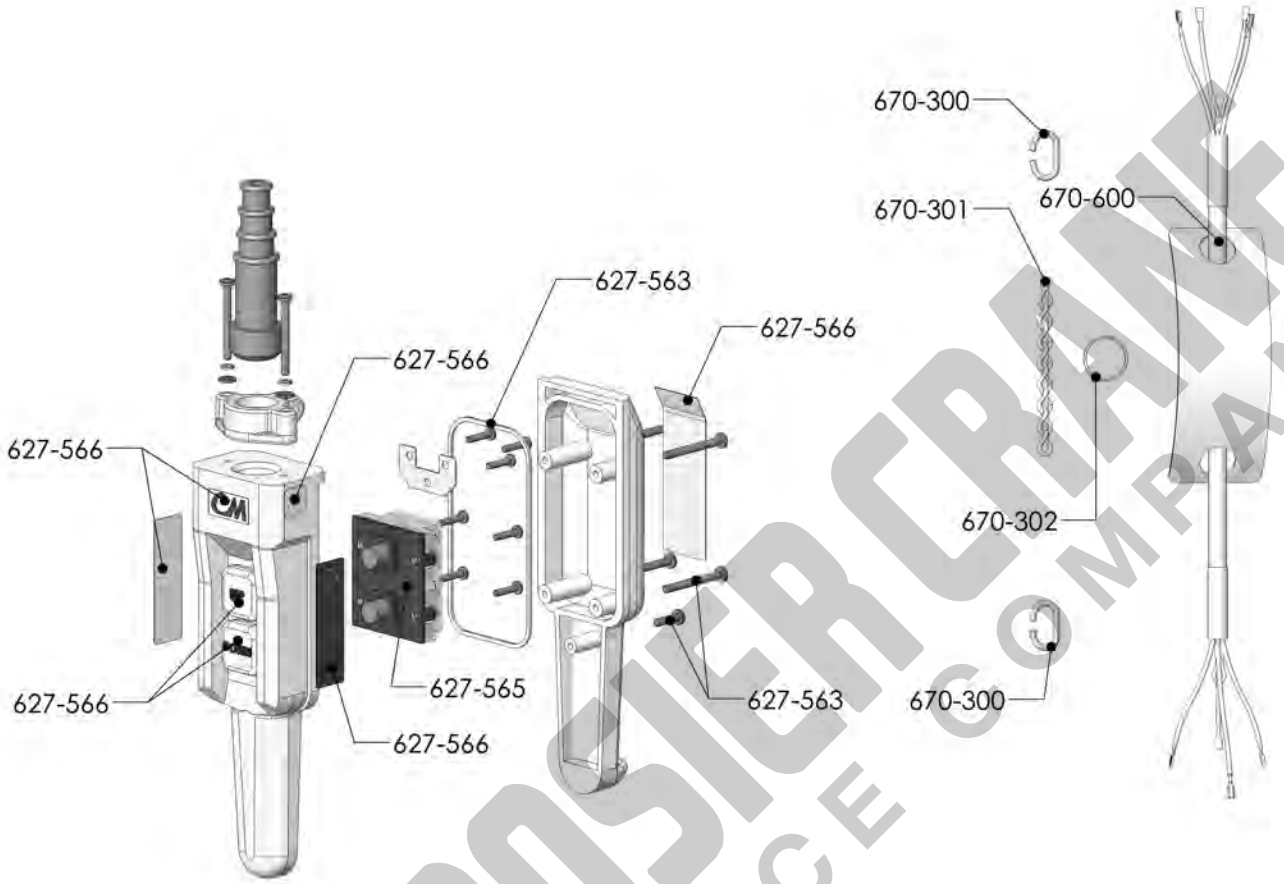

Figure 15.

Two Speed Hoist Control Station			
Key Number	**Part Name**	**No. Req'd**	**Part Number**
670-300	Control Station Chain Attaching Link (Specify Number Required)	-	59883
670-301	Control Station Chain (Specify Length Required)	-	621431
670-302	Control Station Cord Clip (Specify Number Required)	-	20744
627-551	Control Station Grommet	1	58278
627-552	Control Station (Includes 627-551 thru 627-567)	1	58273
627-563	Control Station Hardware Kit w/gasket	1	58275
627-565	Control Station 1-speed Insert	1	58256
627-566	Control Station Warning Label Kit (Includes Exterior Labels)	1	58276
627-567	Contol Station Button Label Kit	1	58277
670-600	Standard Control Cord Assembly	1	Contact Factory

HOOSIER CRANE SERVICE COMPANY

POWERSTAR HOIST & TROLLEY CONTROL STATION

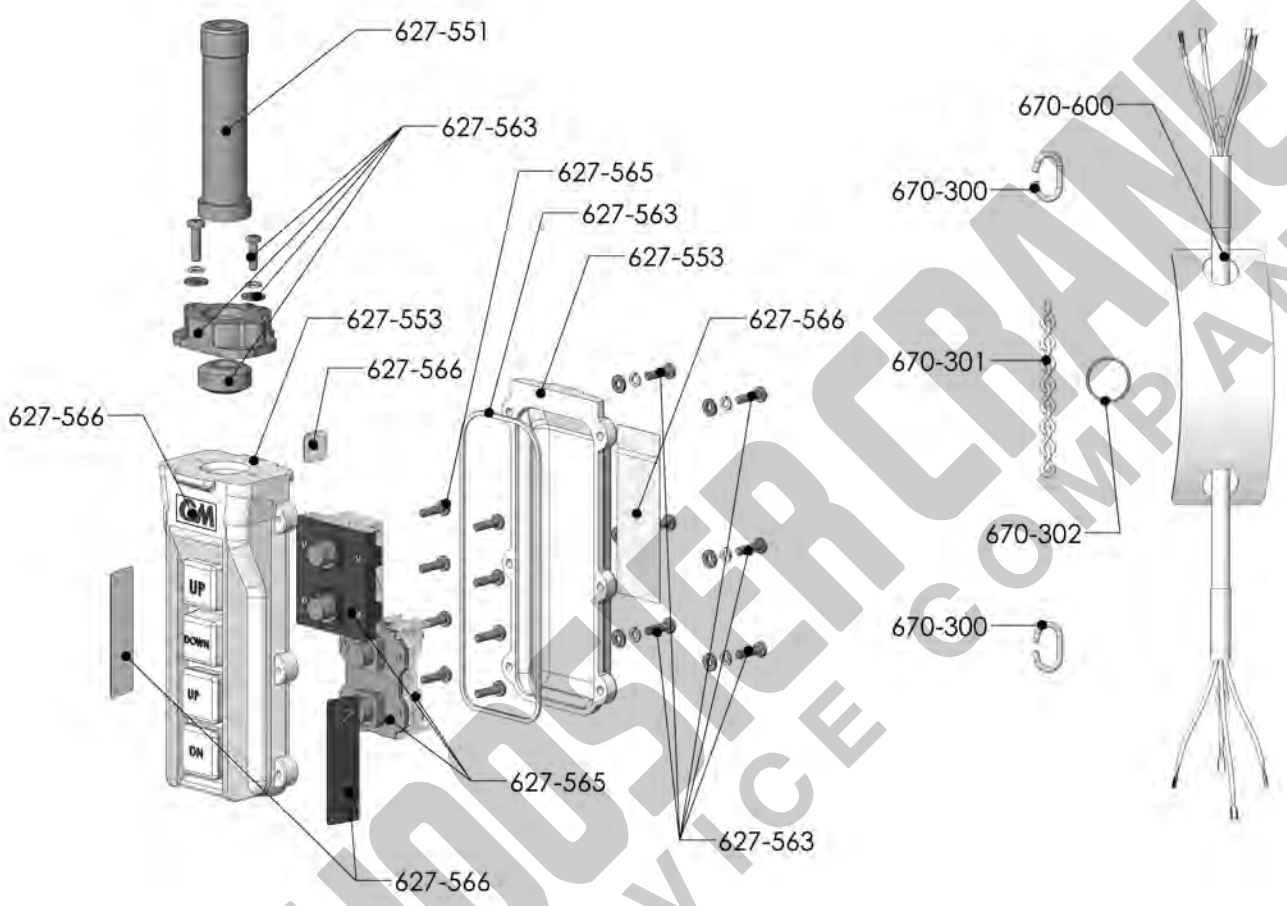

Figure 16.

Four Directional Control Station			
Key Number	**Part Name**	**No. Req'd**	**Part Number**
670-300	Control Station Chain Attaching Link (Specify Number Required)	-	59883
670-301	Control Station Chain (Specify Length Required)	-	621431
670-302	Control Station Cord Clip (Specify Number Required)	-	20744
627-551	Control Station Grommet	1	58278
627-552	Control Station (Includes 627-551 thru 627-567)(For Single Speed Hoist & Single Speed Trolley	1	58219 CM
	Control Station (Includes 627-551 thru 627-567)(For 2 Speed Hoist & Single Speed Trolley	1	58220 CM
627-563	Control Station Hardware Kit w/gasket	1	58275
627-565	Control Station 1-Speed Insert	1	58255
	Control Station 2-Speed Insert	1	52856
627-566	Control Station Warning Label Kit (Includes Exterior Labels)	1	58276
627-567	Contol Station Button Label Kit	1	58277
670-600	Standard Control Cord Assembly	1	Contact Factory

HOOSIER CRANE SERVICE COMPANY

Figure 17. Parts Illustration-Exploded View-Control Stations and Separate Motor Driven Trolley Components

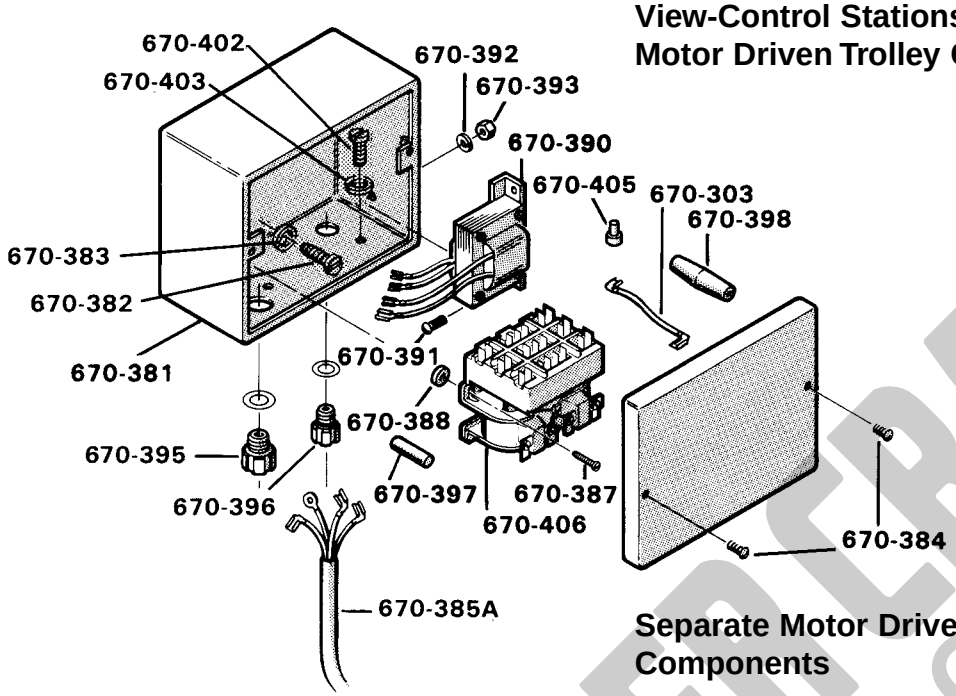

Separate Motor Driven Trolley Control Components

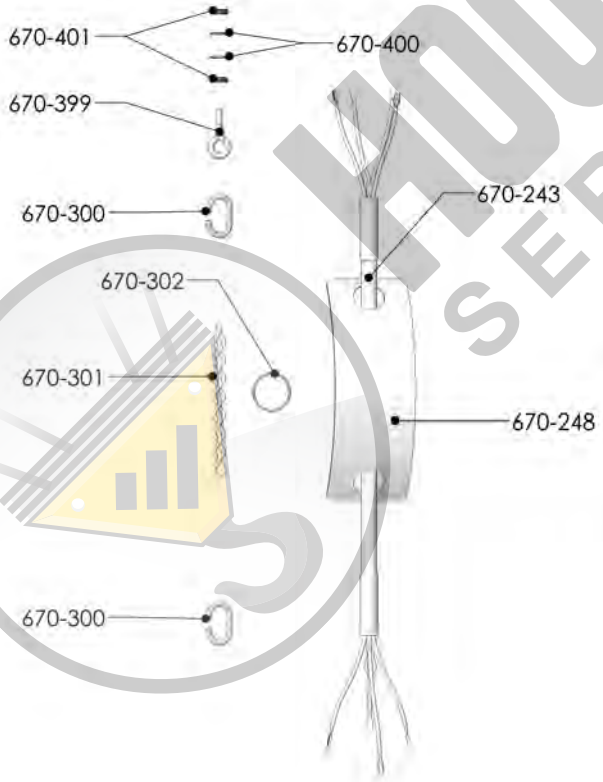

***Part No. 58252**

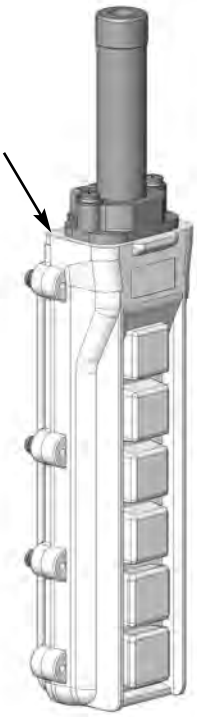

*** 6-Button Control Station-Individual components not available for repair.**

HOOSIER CRANE SERVICE COMPANY

NOTES

HOOSIER CRANE
SERVICE COMPANY

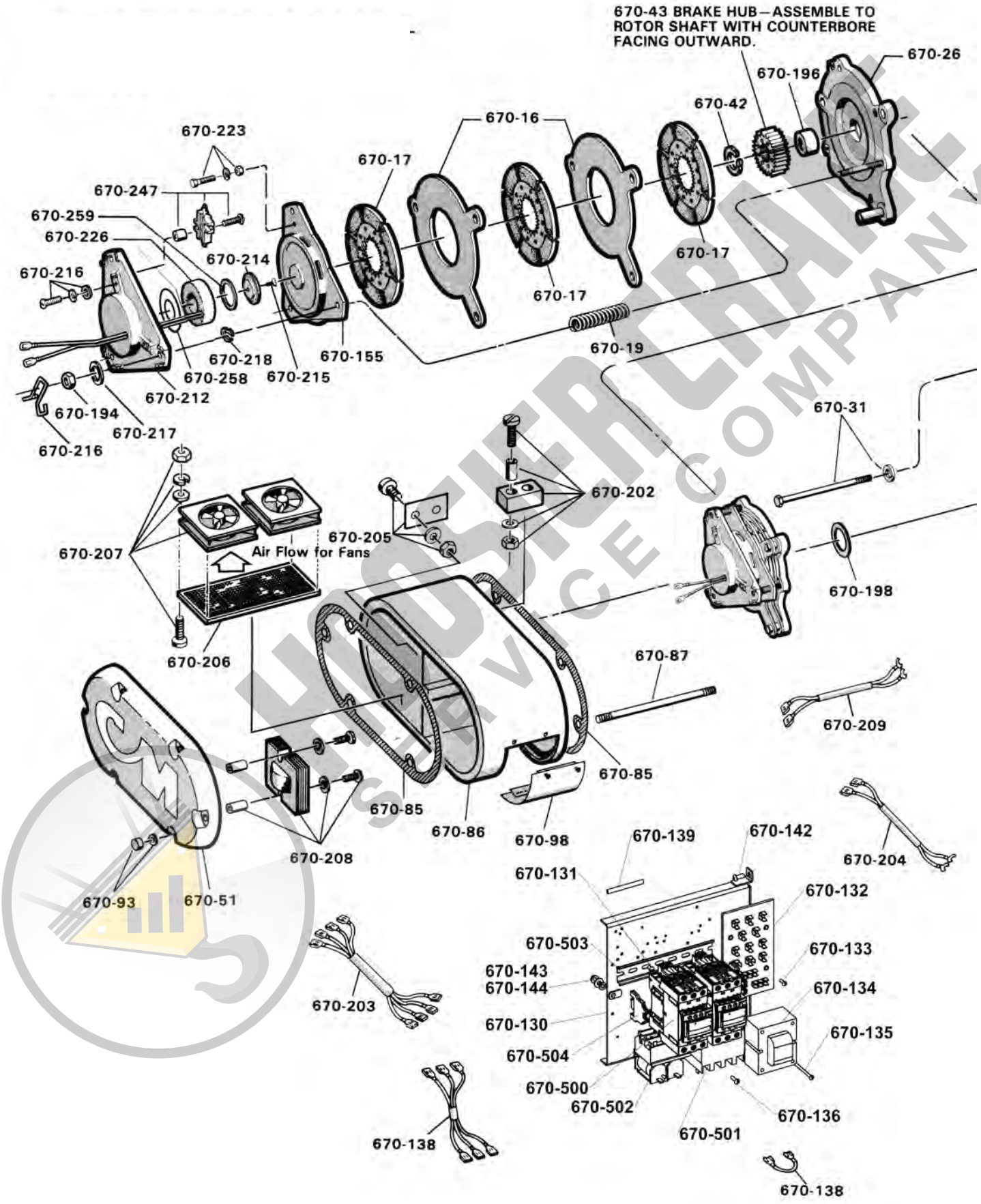
670-43 BRAKE HUB—ASSEMBLE TO ROTOR SHAFT WITH COUNTERBORE FACING OUTWARD.
670-26
670-196
670-42
670-16
670-223
670-17
670-247
670-259
670-226
670-214
670-17
670-216
670-17
670-19
670-218
670-155
670-258
670-215
670-212
670-194
670-217
670-216
670-31
670-202
670-205
670-207
Air Flow for Fans
670-198
670-206
670-87
670-209
670-85
670-85
670-86
670-98
670-208
670-139
670-142
670-204
670-131
670-93
670-51
670-132
670-503
670-133
670-143
670-144
670-134
670-203
670-130
670-135
670-504
670-500
670-502
670-136
670-501
670-138
670-138

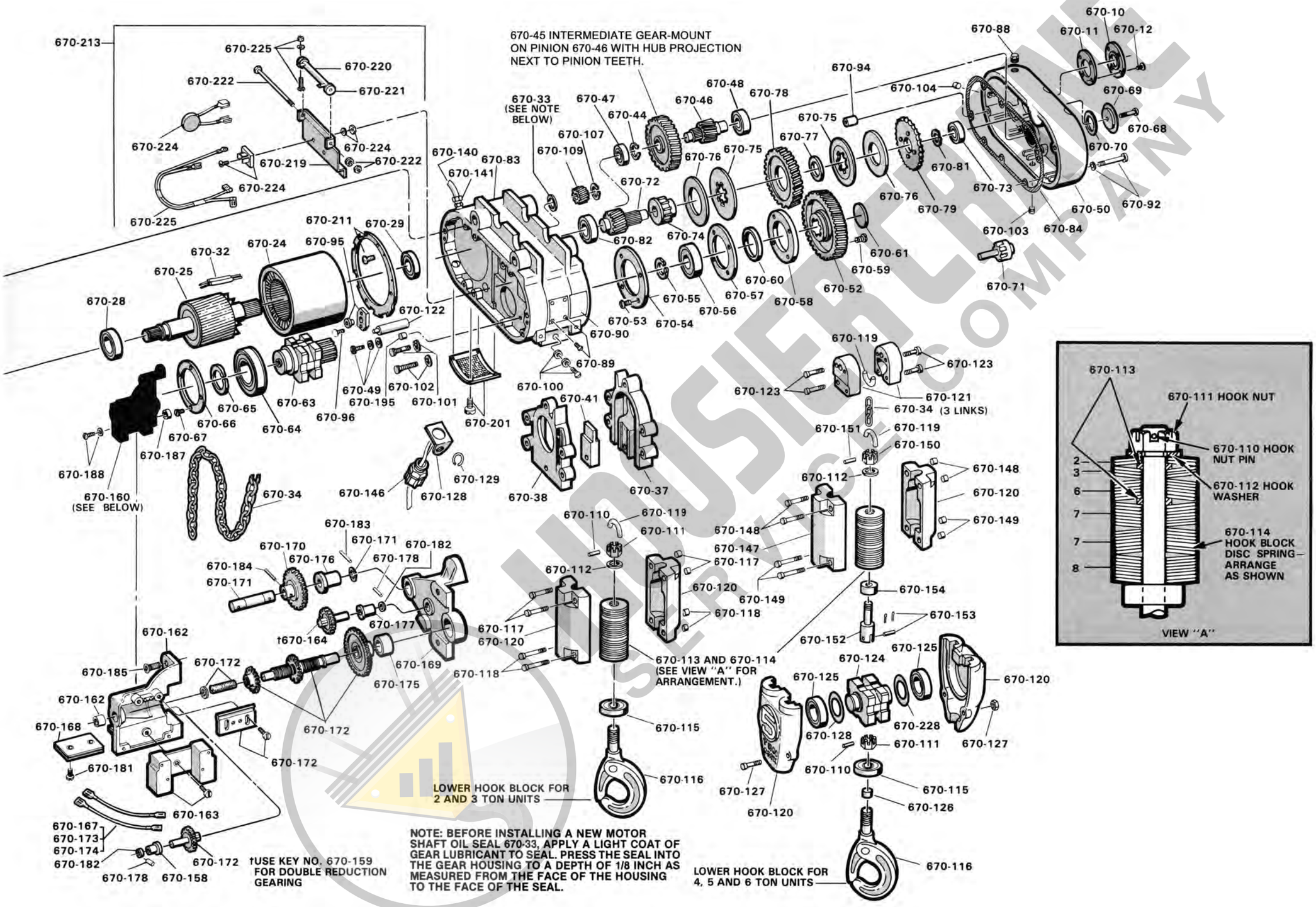
670-45 INTERMEDIATE GEAR-MOUNT ON PINION 670-46 WITH HUB PROJECTION NEXT TO PINION TEETH.
670-33 (SEE NOTE BELOW)
670-160 (SEE BELOW)
670-113 AND 670-114 (SEE VIEW "A" FOR ARRANGEMENT.)
670-34 (3 LINKS)
LOWER HOOK BLOCK FOR 2 AND 3 TON UNITS
LOWER HOOK BLOCK FOR 4, 5 AND 6 TON UNITS
†USE KEY NO. 670-159 FOR DOUBLE REDUCTION GEARING
NOTE: BEFORE INSTALLING A NEW MOTOR SHAFT OIL SEAL 670-33, APPLY A LIGHT COAT OF GEAR LUBRICANT TO SEAL. PRESS THE SEAL INTO THE GEAR HOUSING TO A DEPTH OF 1/8 INCH AS MEASURED FROM THE FACE OF THE HOUSING TO THE FACE OF THE SEAL.
670-111 HOOK NUT
670-110 HOOK NUT PIN
670-112 HOOK WASHER
670-114 HOOK BLOCK DISC SPRING ARRANGE AS SHOWN
VIEW "A"

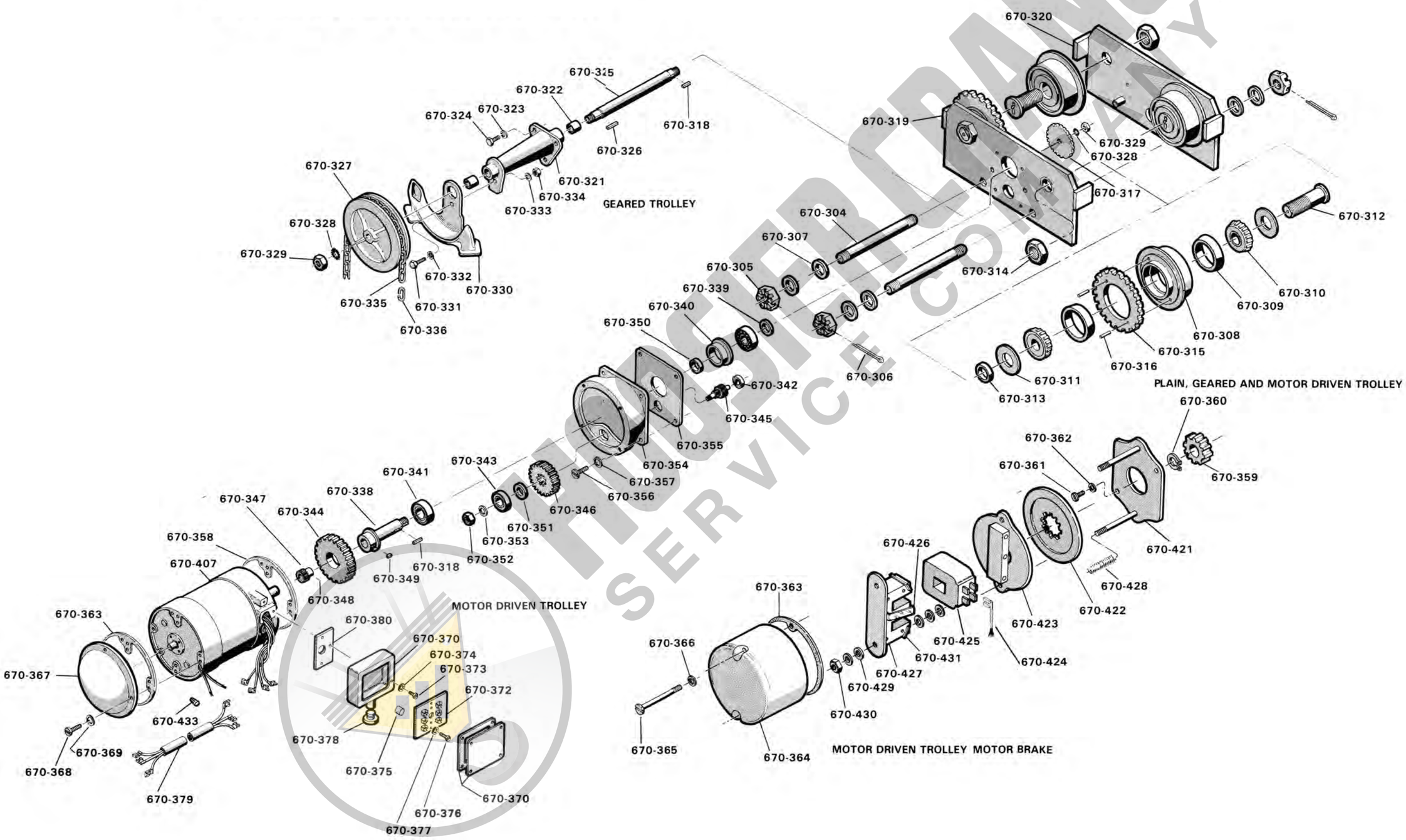

HUBER CRANE SERVICE COMPANY

Parts List and Exploded View,
Chain Container and Lug Suspension

Figure 18.

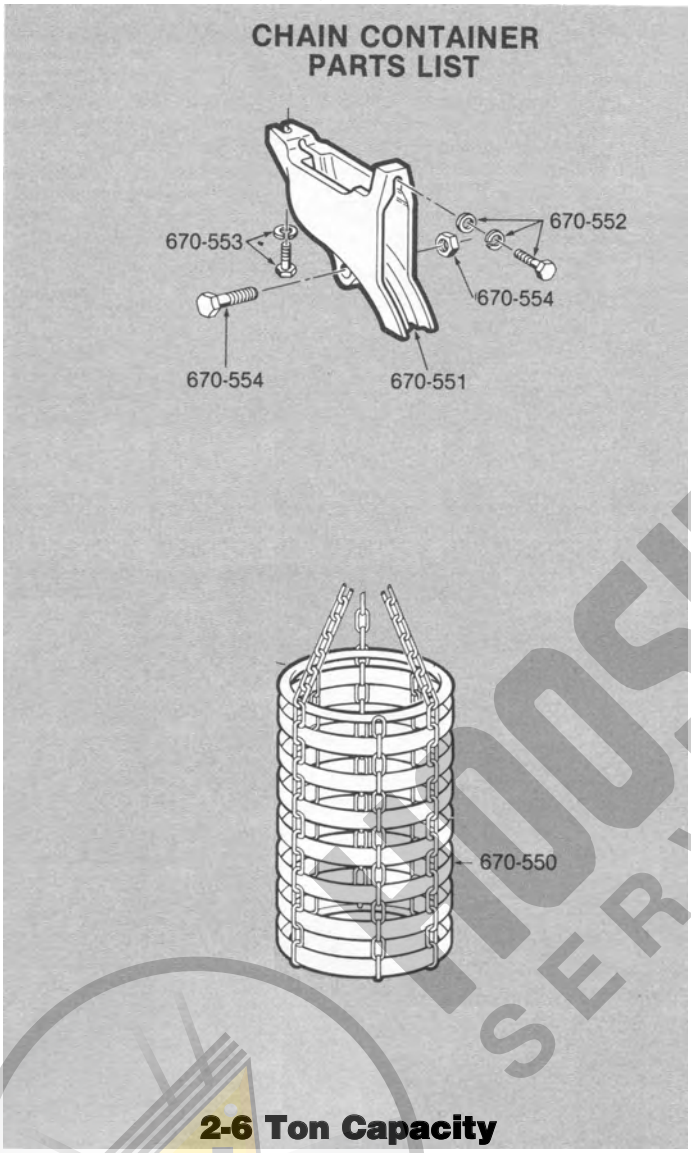

2-6 Ton Capacity

Figure 19.

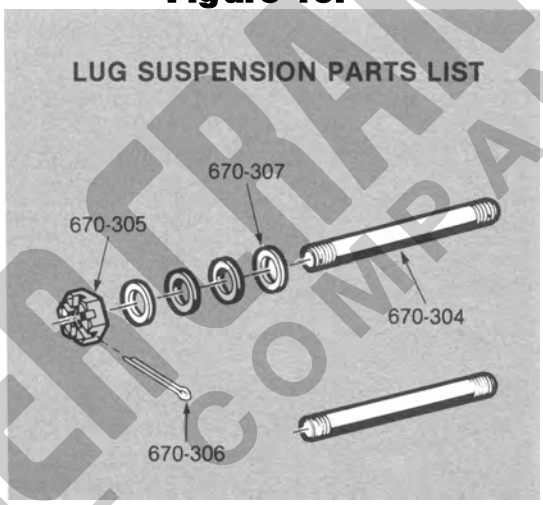

HOOSIER CRANE SERVICE COMPANY

NOTES

HOOSIER CRANE
SERVICE COMPANY

Figure 20.

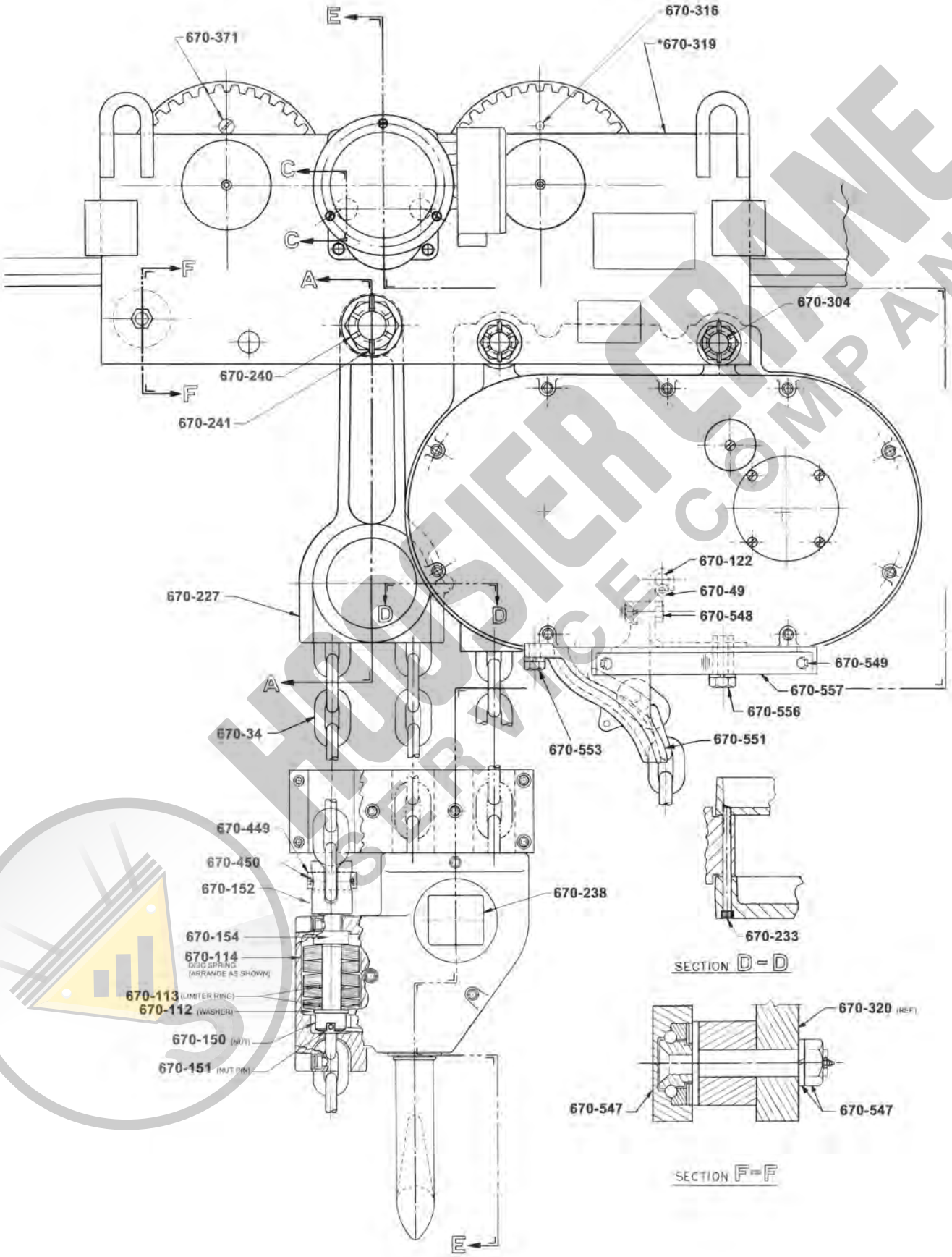

Parts List Drawing (7½, 9 and 10 Ton Hoist & Trolley)-3 Part Reeved

Figure 21.

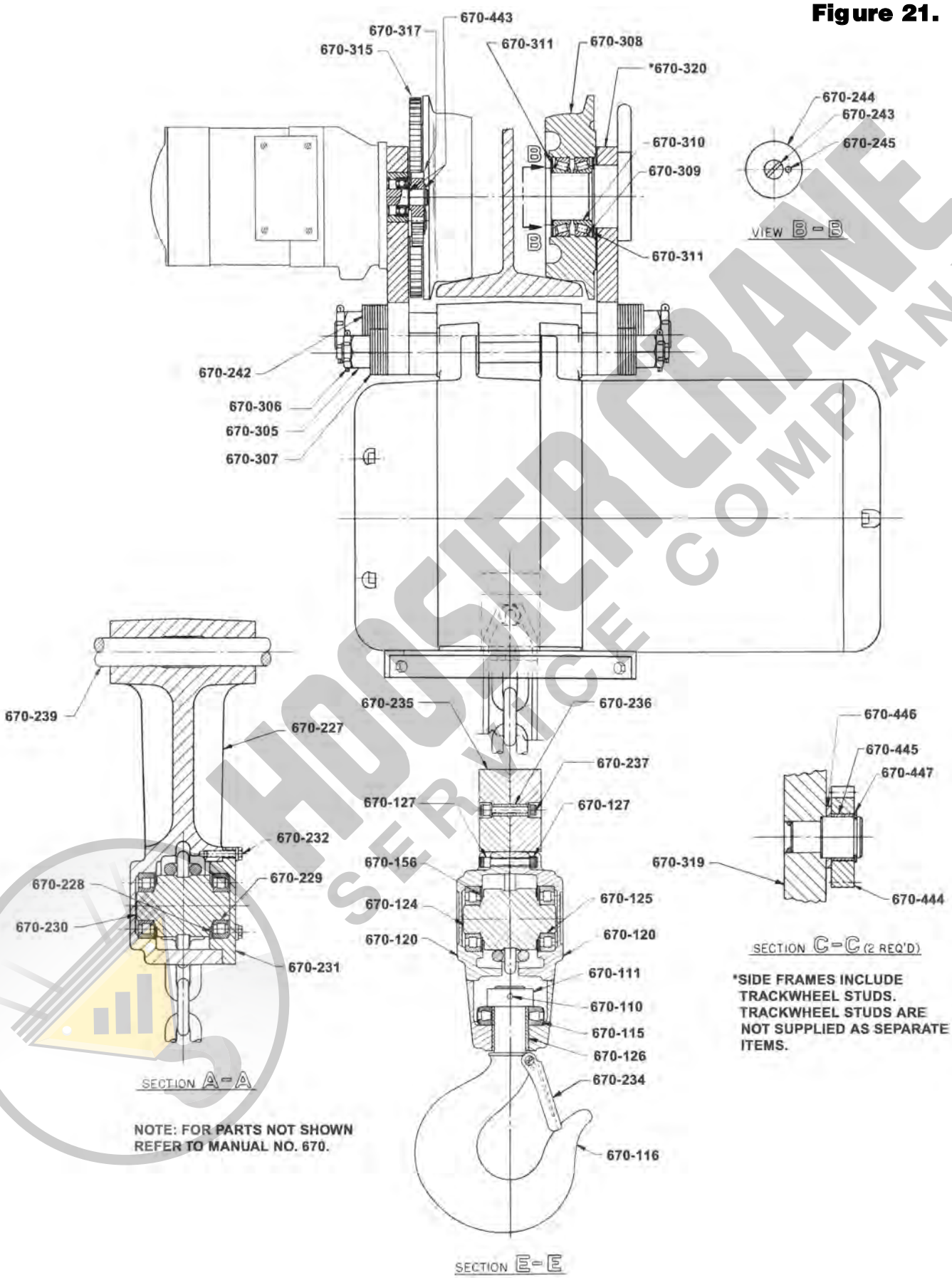

Parts List Drawing (7½, 9 and 10 Ton Hoist & Trolley)-3 Part Reeved

Figure 22.

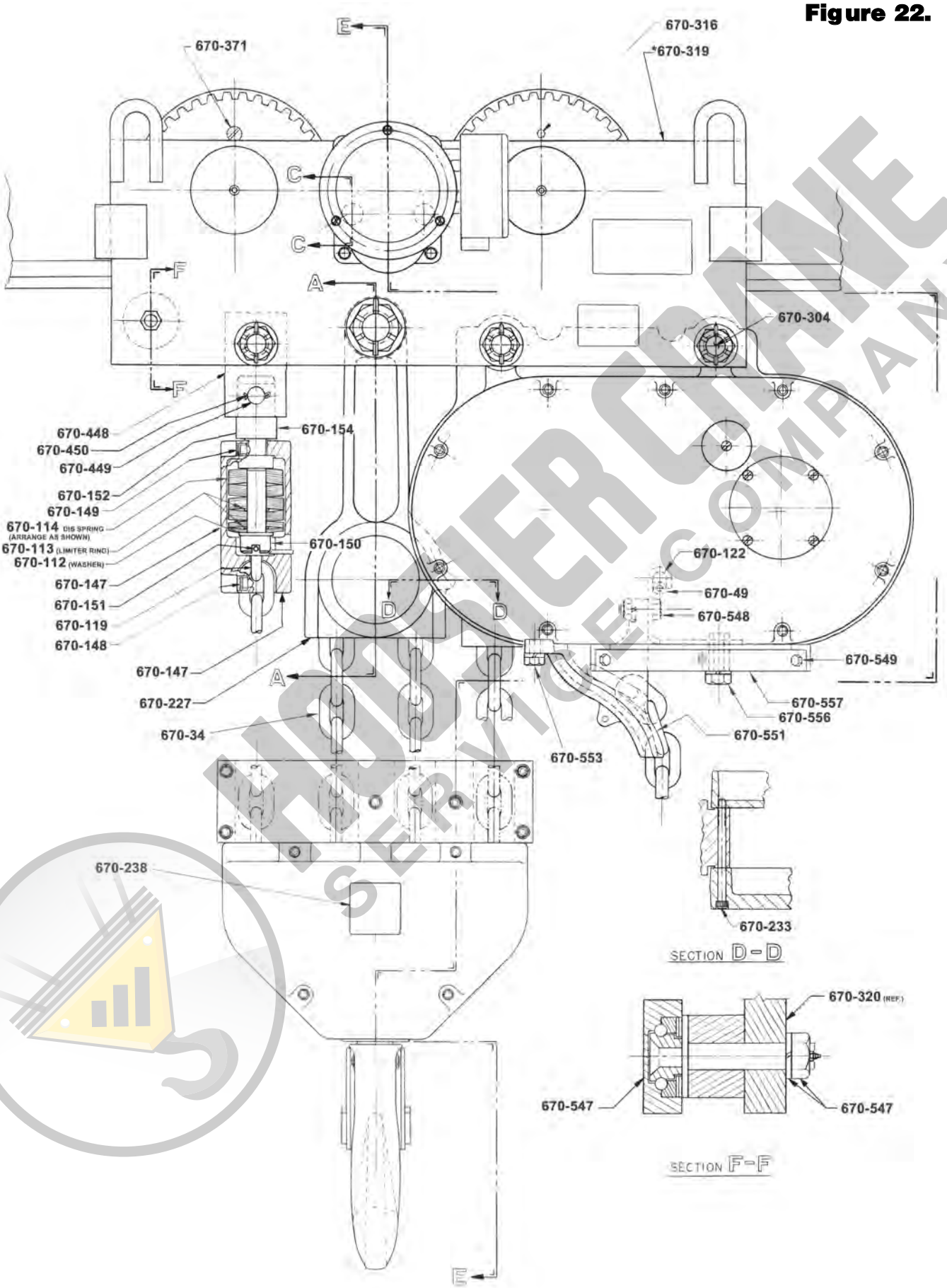

Parts List Drawing (10 & 12 Ton Hoist & Trolley)-4 Part Reeved

Figure 23.

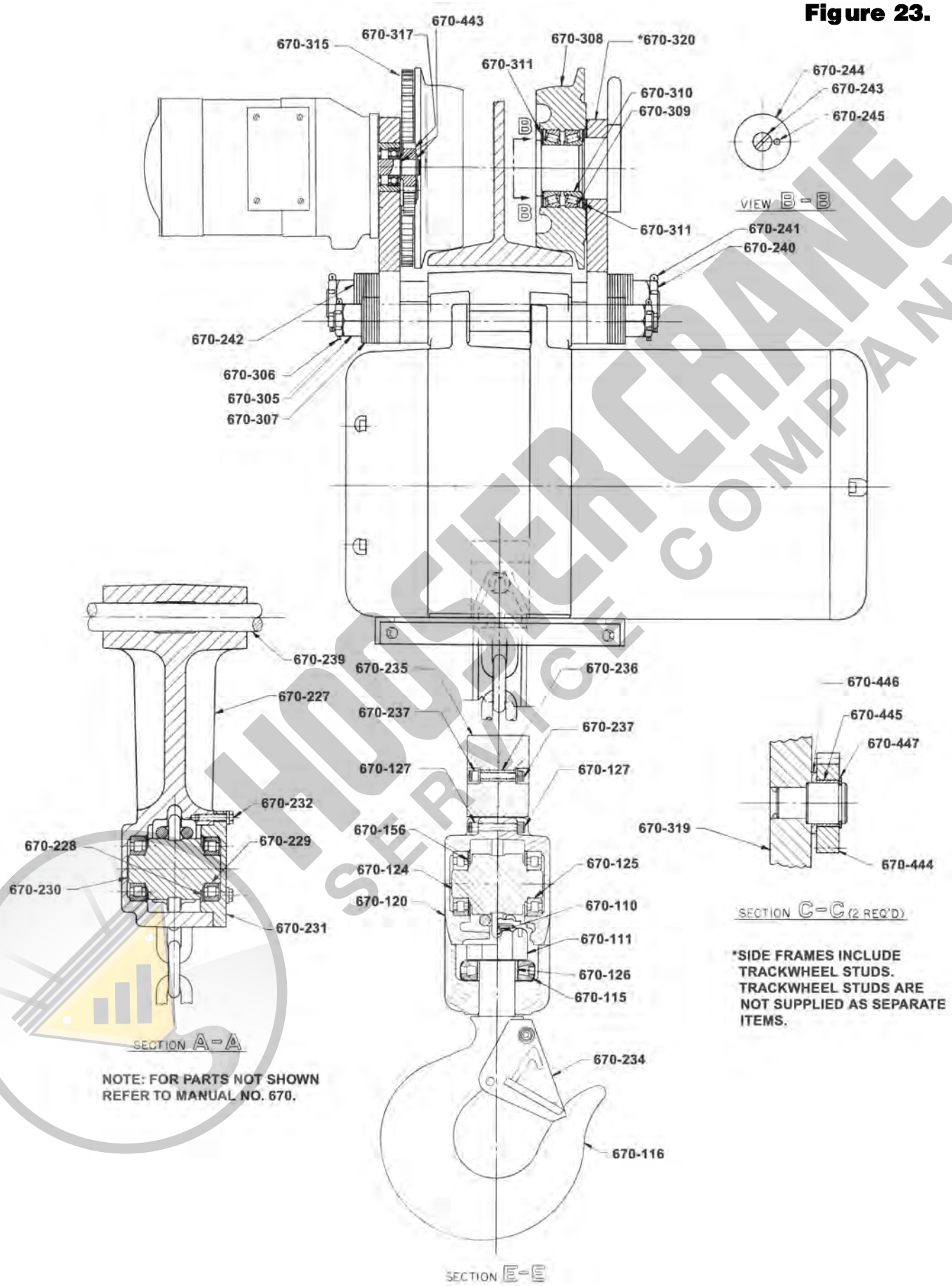

Parts List Drawing (10 & 12 Ton Hoist & Trolley)-4 Part Reeved

HOOSIER CRANE SERVICE COMPANY

NOTES

HOOSIER CRANE SERVICE COMPANY

Note: When ordering parts, always furnish hoist model and serial number, motor horsepower, voltage, phase, frequency and rated capacity of hoist on which the parts are to be used. For the location of the nearest CM Master Parts Depot, see the list located on the inside front cover.

LIMITATION OF WARRANTIES, REMEDIES AND DAMAGES

THE WARRANTY STATED BELOW IS GIVEN IN PLACE OF ALL OTHER WARRANTIES, EXPRESS OR IMPLIED, OF MERCHANTABILITY, FITNESS FOR A PARTICULAR PURPOSE, OR OTHERWISE, NO PROMISE OR AFFIRMATION OF FACT MADE BY ANY AGENT OR REPRESENTATIVE OF SELLER SHALL CONSTITUTE A WARRANTY BY SELLER OR GIVE RISE TO ANY LIABILITY OR OBLIGATION.

Seller warrants that on the date of delivery to carrier the goods are free from defects in workmanship and materials.

SELLER'S SOLE OBLIGATION IN THE EVENT OF BREACH OF WARRANTY OR CONTRACT OR FOR NEGLIGENCE OR OTHERWISE WITH RESPECT TO GOODS SOLD SHALL BE EXCLUSIVELY LIMITED TO REPAIR OR REPLACEMENT, F.O.B. SELLER'S POINT OF SHIPMENT, OF ANY PARTS WHICH SELLER DETERMINES TO HAVE BEEN DEFECTIVE or if Seller determines that such repair or replacement is not feasible, to a refund of the purchase price upon return of the goods to Seller.

Any action against Seller for breach of warranty, negligence or otherwise, must be commenced within one year after such cause of action occurs.

NO CLAIM AGAINST SELLER FOR ANY DEFECT IN THE GOODS SHALL BE VALID OR ENFORCEABLE UNLESS BUYER'S WRITTEN NOTICE THEREOF IS RECEIVED BY SELLER WITHIN ONE YEAR FROM THE DATE OF SHIPMENT.
Seller shall not be liable for any damage, injury or loss arising out of the use of the goods if, prior to such damage, injury or loss, such goods are (1) damaged or misused following Seller's delivery to carrier; (2) not maintained, inspected, or used in compliance with applicable law and Seller's written instructions and recommendations; or (3) installed, repaired, altered or modified without compliance with such law, instructions or recommendations.
UNDER NO CIRCUMSTANCES SHALL SELLER BE LIABLE FOR INCIDENTAL OR CONSEQUENTIAL DAMAGES AS THOSE TERMS ARE DEFINED IN SECTION 2-715 OF THE UNIFORM COMMERCIAL CODE.

INDEMNIFICATION AND SAFE OPERATION
Buyer shall comply with and require its employees to comply with directions set forth in instructions and manuals furnished by Seller and shall use and require its employees to follow such instructions and manuals and to use reasonable care in the use and maintenance of the goods. Buyer shall not remove or permit anyone to remove any warning or instruction signs on the goods. In the event of personal injury or damage to property or business arising from the use of the goods, Buyer shall within 48 hours thereafter give Seller written notice of such injury or damage. Buyer shall cooperate with Seller in investigating any such injury or damage and in the defense of any claims arising therefrom.

If Buyer fails to comply with this section or if any injury or damage is caused, in whole or in part, by Buyer's failure to comply with applicable federal or state safety requirements, Buyer shall indemnify and hold Seller harmless against any claims, loss or expense for injury or damage arising from the use of the goods.

⚠ WARNING

Alterations or modifications of equipment and use of non-factory repair parts can lead to dangerous operation and injury.

TO AVOID INJURY:

- **Do not alter or modify equipment.**
- **Do use only CM replacement parts.**

Columbus McKinnon Corporation
Industrial Products Division
140 John James Audubon Parkway
Amherst, New York 14228-1197
1-800-888-0985
Fax 716-689-5644

HOOSIER CRANE SERVICE COMPANY